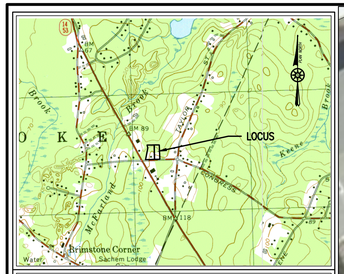

LOCATION MAP SCALE: 1"=2000'±

PEMBROKE PLANNING BOARD

THIS SITE PLAN DOES NOT NECESSARILY INDICATE COMPLIANCE WITH THE PEMBROKE ZONING BYLAW

DATE APPROVED: _____

_____

_____

_____

_____

_____

_____

_____

DATE SIGNED: _____

PEMBROKE TOWN CLERK

I, TOWN CLERK OF THE TOWN OF PEMBROKE, MA HEREBY CERTIFY THAT THE NOTICE OF APPROVAL OF THIS PLAN BY THE PLANNING BOARD HAS BEEN RECEIVED AND RECORDED AT THIS OFFICE AND NO APPEAL WAS RECEIVED DURING THE NEXT TWENTY DAYS AFTER RECEIPT AND RECORDING OF SAID NOTICE.

DATE: _____

_____

TOWN CLERK, TOWN OF PEMBROKE:

PLAN 895 OF 1967

FLOOD NOTE:
BY GRAPHIC PLOTTING ONLY, THIS PROPERTY IS IN ZONE X OF THE FLOOD INSURANCE RATE MAP, COMMUNITY PANEL No. 250257 00139J, WHICH BEARS AN EFFECTIVE DATE OF JULY 17, 2012 AND IS NOT IN A SPECIAL FLOOD HAZARD AREA.

40 0 40 80 120

Scale 1" = 40'

REVISIONS	
APRIL 24, 2023	BOARD OF HEALTH PEER REVIEW
MAY 10, 2023	PLANNING BOARD PEER REVIEW

ZONE: RESIDENTIAL–COMMERCIAL
EXISTING USE: RESIDENTIAL
PROPOSED USE: ALLOWED USE WITH SPECIAL PERMIT PER ZBL SECTION IV.2.B.3 – MULTI–DWELLING STRUCTURES, NOT TO EXCEED 4 UNITS PER ACRE
PARCEL SIZE 143,515 SF
*VARIANCE REQUIRED, ** SPECIAL PERMIT REQUIRED (PB)
DIMENSIONAL REQUIREMENTS:

	REQUIRED\ALLOWED	EXISTING	PROPOSED
LOT AREA (RECORD 143,515 S.F.)	120,000 S.F.	143,515 S.F.	143,515 S.F.
LOT AREA EXCLUSIVE OF WETLANDS	120,000 S.F.	112,951S.F.	112,951 S.F.*
LOT PERIMETER RATIO (143,515\1,558.9)	55:1	92:1	92:1
LOT FRONTAGE	250 FT	399.72 FT	399.72 FT
MULTIUNIT DWELLINGS REQUIRE AT LEAST TWENTY FEET OF FRONTAGE PER UNIT			
11 UNITS X 20	220 FT	N/A	399.72
(BUILDING, STRUCTURES, PAVED AREAS)			
FRONT SETBACK	100 FT	9.9 FT	41 FT*
*SIDE SETBACK	40 FT	44.4 FT	21 FT*
REAR SETBACK	100 FT	22.9 FT	65 FT*
MAX HEIGHT	2.5 STORIES	2 STORIES	2 STORIES
MAX BUILDING FLOOR AREA (%) 24,210/143515	35%	N/A	16.9%
COVERAGE (%) 36602/143515	60%	N/A	25.5%
LANDSCAPING	40%	N/A	75.1%
*(SEE NOTE 7)			

PARKING V.4.A.1.a. RESIDENCE, BUSINESS A AND RESIDENTIAL COMMERCIAL DISTRICTS:
A. FOR MULTIUNIT DWELLINGS, TWO PARKING SPACES PER DWELLING UNIT.

		REQUIRED	PROPOSED
(MULTIUNIT DWELLING)	2 SP\UNIT	22 SPACES	27 SPACES
	TOTAL	22 SPACES	27 SPACES

**MULTI–DWELLING STRUCTURES, NOT TO EXCEED A DENSITY OF FOUR DWELLING UNITS PER ACRE 143515/43560 *4 = 13 ALLOWED 11 PROPOSED

ALL MULTIPLE UNIT DWELLINGS ARE LIMITED TO NO MORE THAN ONE DWELLING UNIT PER 10,000 SQUARE FEET OF LOT AREA EXCLUSIVE OF ALL EASEMENTS, CRANBERRY BOGS, WETLANDS, FLOODPLAINS AND WATERSHED AREAS – 112,951/10,000 = 11.3 ALLOWED, 11 PROPOSED

NOTES:

1. PROPERTY LINE, STREET LINE AND OWNER INFORMATION WAS COMPILED FROM RECORDS ON FILE AT THE PLYMOUTH COUNTY REGISTRY OF DEEDS AND PEMBROKE TOWN HALL.
2. TOPOGRAPHIC INFORMATION SHOWN ON THIS PLAN IS BASED UPON AN ACTUAL ON THE GROUND SURVEY PERFORMED BY GRADY CONSULTING, L.L.C. ON JULY 2022.
3. ALL ELEVATIONS ARE BASED ON THE 1988 NORTH AMERICAN VERTICAL DATUM.
4. THE SUBJECT SITE IS LOCATED WITHIN THE "RESIDENTIAL–COMMERCIAL" DISTRICT AS DEPICTED ON THE TOWN OF PEMBROKE ZONING DISTRICT MAP, REVISED OCTOBER 27, 2015.
5. WETLAND RESOURCE AREAS WERE DELINEATED BY SOUTH RIVER ENVIRONMENTAL SERVICES AND APPROVED VIA AN ORDER OF RESOURCE AREA DELINEATION BY THE PEMBROKE CONSERVATION COMMISSION FILE UMBER SE 056–1086.
6. THE LOCATIONS OF EXISTING UNDERGROUND UTILITIES SHOWN ON THIS PLAN ARE BASED ON FIELD OBSERVATIONS AND RECORD INFORMATION. THEY ARE NOT WARRANTED TO BE EXACTLY LOCATED AS SHOWN OR THAT ALL UNDERGROUND UTILITIES OR OTHER STRUCTURES ARE SHOWN ON THIS PLAN.
7. THE PROPERTY IS SUBJECT TO A GRANT OF VARIANCES FROM THE ZONING BOARD OF APPEALS DATED OCTOBER 24, 2022. GRANT OF VARIANCE IS RECORDED AT THE PLYMOUTH COUNTY REGISTRY OF DEEDS IN BOOK 57438 PAGE 195. VARIANCES INCLUDE THE FOLLOWING:

	SECTION	REQUIRED	APPROVED
A.	SECTION IV.2.D.1 LOT SIZES:	120,000 SF	113,735 SF
B.	SECTION IV.2.D.4 (FRONT YARDS)	100 FT	40 FT
C.	SECTION IV.2.D.5 (SIDE YARDS)	40 FT	20 FT
D.	SECTION IV.2.D.6 (REAR YARDS)	100 FT	65 FT

WAIVER REQUESTS:

4.22 THE APPLICANT REQUESTS A WAIVER FOR THE REQUIREMENT OF A TRAFFIC STUDY.
5.6.2 TO ELIMINATE THE REQUIREMENT OF CURBING AT EDGES OF ALL PAVED SURFACES.

AI HEREBY CERTIFY THAT AND INSTRUMENT BOUNDARY SURVEY HAS BEEN CONDUCTED ON THIS PROPERTY AND I CERTIFY THAT THE LOCATIONS OF THE BUILDING, SETBACKS AND ALL OTHER DIMENSIONS, ELEVATIONS AND MEASUREMENTS ARE ACCURATE.

TIMOTHY BENNETT, P.L.S. #38856

COMMONWEALTH OF MASSACHUSETTS
TIMOTHY R. BENNETT
No. 38856
REGISTERED PROFESSIONAL LAND SURVEYOR

COMMONWEALTH OF MASSACHUSETTS
KEVIN S. GRADY
CIVIL
No. 46264
REGISTERED PROFESSIONAL ENGINEER

SHEET INDEX

RECORD OWNER:

ASSESSOR MAP F9 LOT 11
KEVIN ST. GEORGE
PO BOX 174
NO. PEMBROKE, MA 02358
DEED BOOK 44242 PAGE 242
LOT 1 – PLAN No. 865 OF 1967
ASSESSOR MAP F9 LOT 12C
KEVIN ST. GEORGE
DEED BOOK 49318 PAGE 82
LOT 4– PLAN No. 270 OF 1993

PLAN REFERENCES

1. PLAN BOOK 35 PAGE 1040
2. PLAN BOOK 3415 PAGE 383

SITE PLAN

ASSESSORS MAP F9 LOT 11 & 12C
#0 &74 CONGRESS STREET
PEMBROKE, MASSACHUSETTS

PREPARED FOR:
WHATBARN, LLC
29 DUCK HILL ROAD
DUXBURY MA 02332

MARCH 13, 2023
SCALE: AS NOTED
JOB No. 22–286

GRADY CONSULTING, L.L.C.
Civil Engineers, Land Surveyors & Landscape Architects
71 Evergreen Street, Suite 1, Kingston, MA 02364
Phone (781) 585–2300

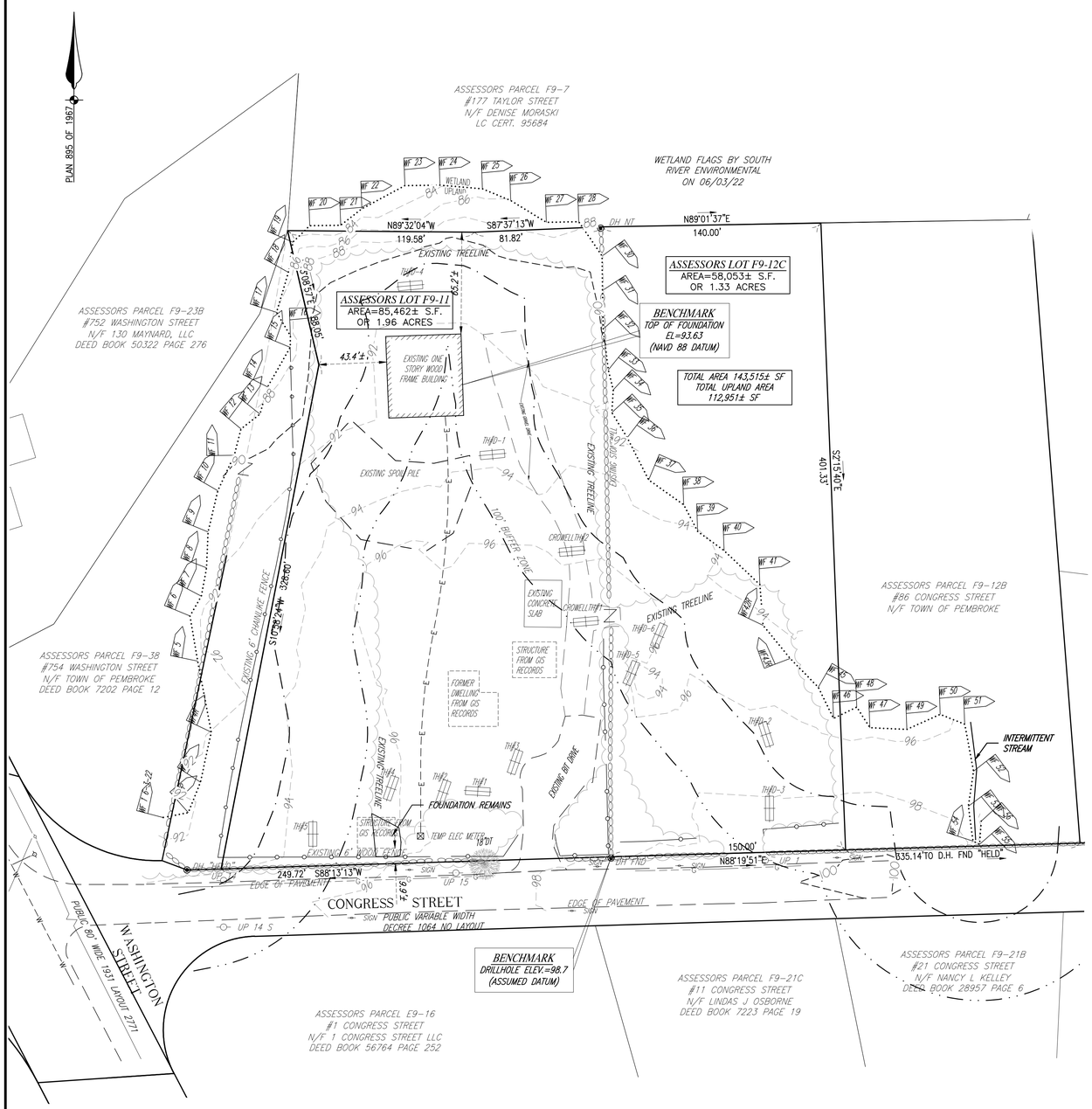

40 0 40 80 120

Scale 1" = 40'

VICINITY MAP SCALE 1"=60'

SITE PLAN

ASSESSORS MAP F9 LOT 11 & 12C
#0 &74 CONGRESS STREET
PEMBROKE, MASSACHUSETTS

EXISTING CONDITIONS

REVISIONS	
APRIL 24, 2023	BOARD OF HEALTH PEER REVIEW

PREPARED FOR:
WHATBARN, LLC
29 DUCK HILL ROAD
DUXBURY MA 02332

MARCH 13, 2023
SCALE: AS NOTED
JOB No. 22-286

COMMONWEALTH OF MASSACHUSETTS
TIMOTHY R. BENNETT
No. 36856
REGISTERED PROFESSIONAL LAND SURVEYOR

COMMONWEALTH OF MASSACHUSETTS
KEVIN S. GRADY
CIVIL
No. 46264
REGISTERED PROFESSIONAL ENGINEER

GRADY CONSULTING, L.L.C.
Civil Engineers, Land Surveyors & Landscape Architects
71 Evergreen Street, Suite 1, Kingston, MA 02364
Phone (781) 585-2300

5.2 SITE LIGHTING
ACCESS WAYS, PARKING AREAS, AND PEDESTRIAN WALKWAYS SHALL HAVE ADEQUATE LIGHTING FOR SECURITY AND SAFETY REASONS. LIGHTING SHALL MEET THE FOLLOWING STANDARDS:

5.2.1 THE LUMINARIES/LIGHTING FIXTURES SHALL BE THE SHOE BOX TYPE OR DECORATIVE IN NATURE (WITH INTERIOR DIRECTIONAL SHIELDS), CONSISTENT WITH THE ARCHITECTURAL THEME OF THE DEVELOPMENT. FLOOD AND AREA LIGHTING IS UNACCEPTABLE. ALL LUMINARIES/LIGHTING FIXTURES SHALL HAVE A TOTAL CUTOFF OF ALL LIGHT AT LESS THAN NINETY (90) DEGREES FROM VERTICAL. THE LIGHTING FIXTURE SHALL ONLY BE VISIBLE FROM BELOW.

5.2.2 REFLECTORS OF PROPER DISTRIBUTION SHALL BE SELECTED FOR MAXIMUM EFFICIENCY. REFLECTORS AND SHIELDING SHALL PROVIDE TOTAL CUTOFF OF ALL LIGHT AT THE PROPERTY LINES OF THE PARCEL TO BE DEVELOPED.

5.2.3 THE LUMINARIES/LIGHTING FIXTURES SHALL NOT EXCEED TWENTY (20) FEET IN HEIGHT OR THE HEIGHT OF THE BUILDING'S ROOFLINE WHICHEVER IS LOWER. THE LUMINARIES/LIGHTING FIXTURES FOR SIDEWALKS/PATHS SHALL NOT EXCEED 12 FEET IN HEIGHT.

5.2.4 WHERE WALL-PACK TYPE LUMINARIES/LIGHTING FIXTURES ARE UTILIZED FOR OUTDOOR LIGHTING FIXTURES, THE FIXTURE SHALL BE EQUIPPED WITH A PRISMATIC LENS TO REDUCE GLARE. WALL-PACK LIGHTING SHALL BE DESIGNED TO A MAXIMUM CUTOFF OF SEVENTY (70) DEGREES FROM VERTICAL. THE LOCATION OF THE WALL-PACK ON THE STRUCTURE SHALL NOT EXCEED 20 FEET IN HEIGHT.

5.2.5 ALL LUMINARIES/LIGHTING FIXTURES SHALL BE RESTRICTED TO A MAXIMUM FOOT-CANDLE LEVEL OF 8.0 (INITIAL), AS MEASURED DIRECTLY BELOW THE FIXTURE AT GRADE.

COMMONWEALTH OF MASSACHUSETTS
TIMOTHY R. BENNETT
No. 36856
REGISTERED PROFESSIONAL LAND SURVEYOR

COMMONWEALTH OF MASSACHUSETTS
KEVIN S. GRADY
CIVIL
No. 46264
REGISTERED PROFESSIONAL ENGINEER

SITE PLAN

ASSESSORS MAP F9 LOT 11 & 12C
#0 &74 CONGRESS STREET
PEMBROKE, MASSACHUSETTS

PREPARED FOR:
WHATBARN, LLC
29 DUCK HILL ROAD
DUXBURY MA 02332

MARCH 13, 2023
SCALE: AS NOTED
JOB No. 22-286

GRADY CONSULTING, L.L.C.
Civil Engineers, Land Surveyors & Landscape Architects
71 Evergreen Street, Suite 1, Kingston, MA 02364
Phone (781) 585-2300

SITE LAYOUT

SITE PLAN

ASSESSORS MAP F9 LOT 11 & 12C
#0 &74 CONGRESS STREET
PEMBROKE, MASSACHUSETTS

PREPARED FOR:
WHATBARN, LLC
29 DUCK HILL ROAD
DUXBURY MA 02332

MARCH 13, 2023
SCALE: AS NOTED
JOB No. 22-286

GRADING

REVISIONS	
APRIL 24, 2023	BOARD OF HEALTH PEER REVIEW
MAY 10, 2023	PLANNING BOARD PEER REVIEW

GRADY CONSULTING, L.L.C.
Civil Engineers, Land Surveyors & Landscape Architects
71 Evergreen Street, Suite 1, Kingston, MA 02364
Phone (781) 585-2300

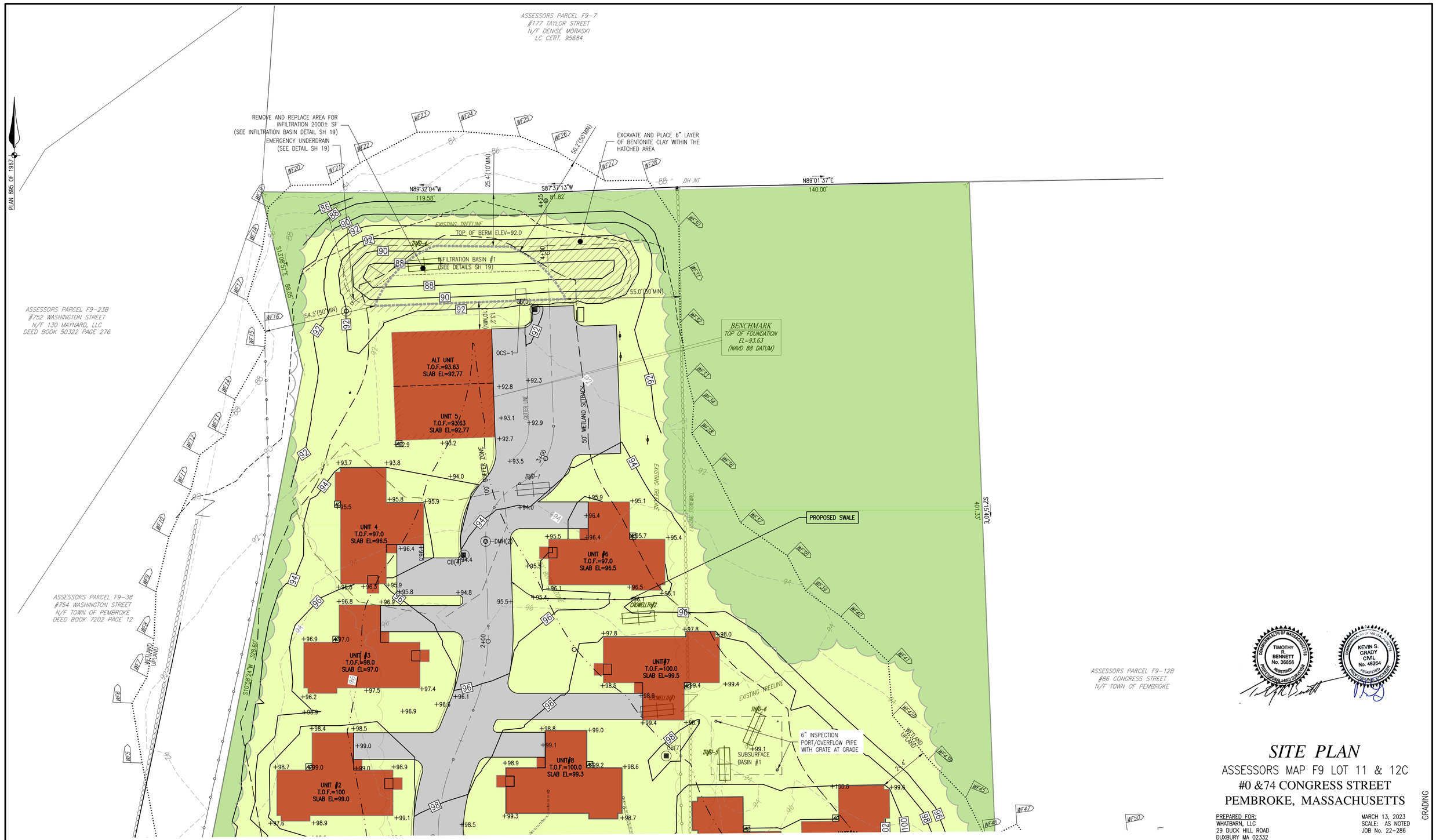

COMMONWEALTH OF MASSACHUSETTS
TIMOTHY R. BENNETT
No. 36856
PROFESSIONAL LAND SURVEYOR
REGISTERED

COMMONWEALTH OF MASSACHUSETTS
KEVIN S. GRADY
CIVIL
No. 46264
REGISTERED
PROFESSIONAL ENGINEER

SITE PLAN

ASSESSORS MAP F9 LOT 11 & 12C
#0 &74 CONGRESS STREET
PEMBROKE, MASSACHUSETTS

PREPARED FOR:
WHATBARN, LLC
29 DUCK HILL ROAD
DUXBURY MA 02332

MARCH 13, 2023
SCALE: AS NOTED
JOB No. 22-286

GRADING

GRADY CONSULTING, L.L.C.
Civil Engineers, Land Surveyors & Landscape Architects
71 Evergreen Street, Suite 1, Kingston, MA 02364
Phone (781) 585-2300

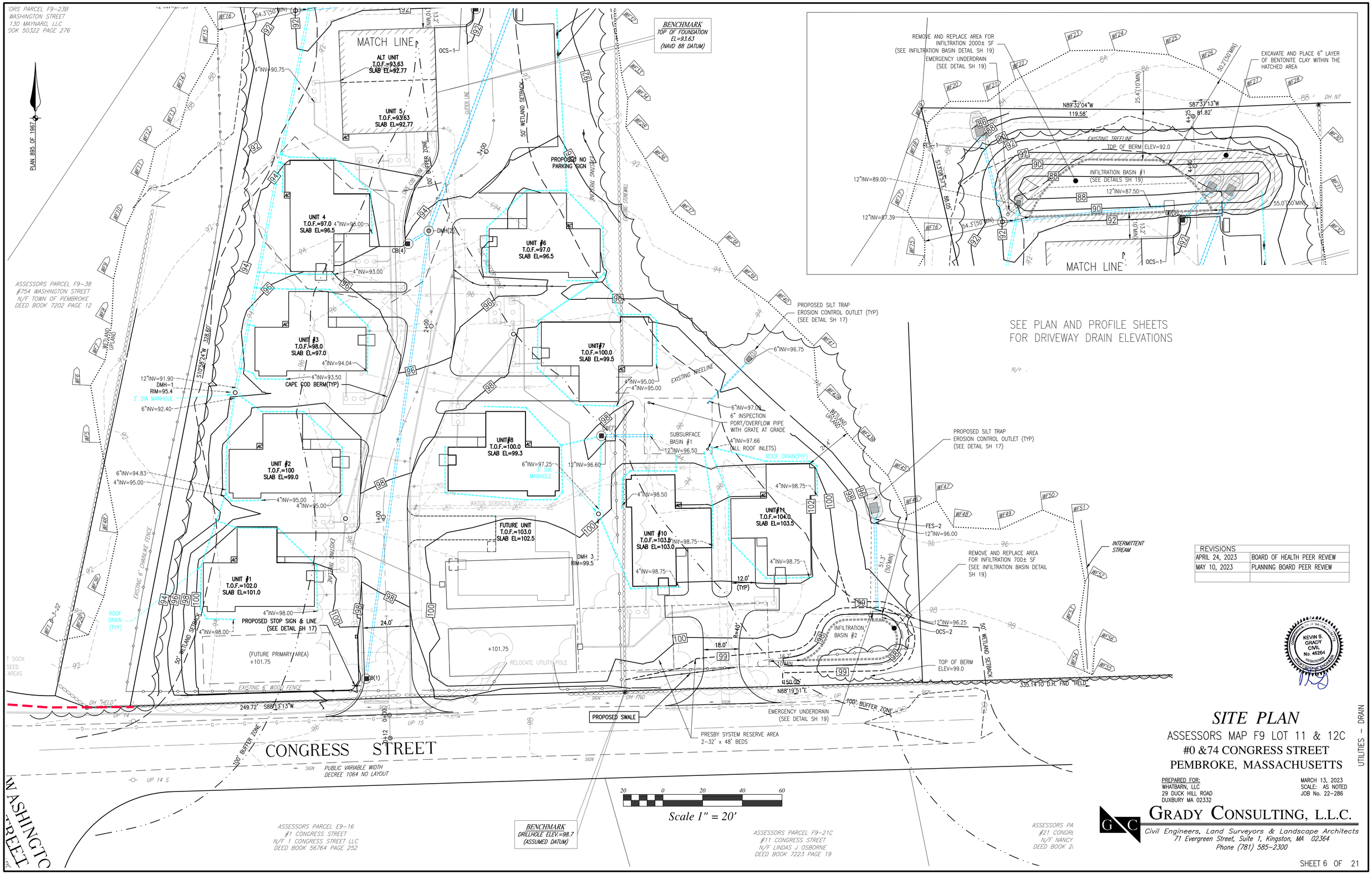

SEE PLAN AND PROFILE SHEETS
FOR DRIVEWAY DRAIN ELEVATIONS

REVISIONS	
APRIL 24, 2023	BOARD OF HEALTH PEER REVIEW
MAY 10, 2023	PLANNING BOARD PEER REVIEW

KEVIN S. GRADY
CIVIL
No. 46264
REGISTERED PROFESSIONAL ENGINEER

SITE PLAN

ASSESSORS MAP F9 LOT 11 & 12C
#0 &74 CONGRESS STREET
PEMBROKE, MASSACHUSETTS

PREPARED FOR:
WHATBARN, LLC
29 DUCK HILL ROAD
DUXBURY MA 02332

MARCH 13, 2023
SCALE: AS NOTED
JOB No. 22-286

GRADY CONSULTING, L.L.C.
Civil Engineers, Land Surveyors & Landscape Architects
71 Evergreen Street, Suite 1, Kingston, MA 02364
Phone (781) 585-2300

UTILITIES - DRAIN

SHEET 6 OF 21

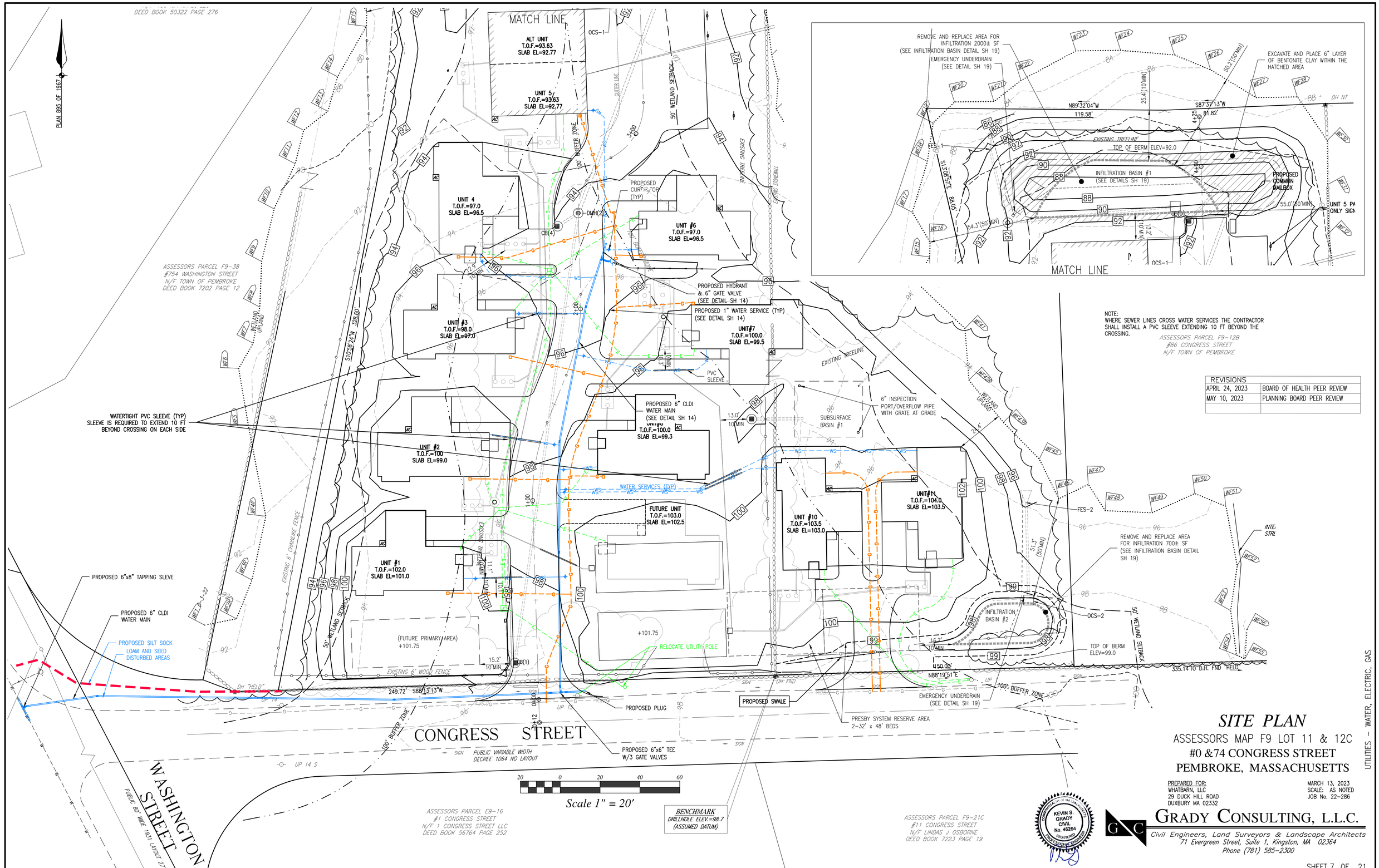

NOTE:
WHERE SEWER LINES CROSS WATER SERVICES THE CONTRACTOR SHALL INSTALL A PVC SLEEVE EXTENDING 10 FT BEYOND THE CROSSING.

ASSESSORS PARCEL F9-12B
#86 CONGRESS STREET
N/F TOWN OF PEMBROKE

REVISIONS	
APRIL 24, 2023	BOARD OF HEALTH PEER REVIEW
MAY 10, 2023	PLANNING BOARD PEER REVIEW

SITE PLAN

ASSESSORS MAP F9 LOT 11 & 12C
#0 &74 CONGRESS STREET
PEMBROKE, MASSACHUSETTS

PREPARED FOR:
WHATBARN, LLC
29 DUCK HILL ROAD
DUXBURY MA 02332

MARCH 13, 2023
SCALE: AS NOTED
JOB No. 22-286

COMMONWEALTH OF MASSACHUSETTS
KEVIN S. GRADY
CIVIL
No. 46264
REGISTERED PROFESSIONAL ENGINEER

GRADY CONSULTING, L.L.C.
Civil Engineers, Land Surveyors & Landscape Architects
71 Evergreen Street, Suite 1, Kingston, MA 02364
Phone (781) 585-2300

PLANT SCHEDULE

DECIDUOUS TREES	QTY	BOTANICAL / COMMON NAME	CONT	CAL	SIZE
ACE RUB	3	ACER RUBRUM 'RED SUNSET' / RED SUNSET MAPLE	B & B	2.5"-3.0" CAL.	
GLE TRI	7	GLEDITSIA TRIACANTHOS INERMIS / THORNLESS COMMON HONEYLOCUST	B & B	2.5"-3.0" CAL.	
PLA XLP	6	PLATANUS X ACERIFOLIA / LONDON PLANE TREE	B & B	2.5"-3.0" CAL.	
TIL COD	4	TILIA CORDATA / LITTLELEAF LINDEN	B & B	2.5"-3.0" CAL.	

EVERGREEN TREES	QTY	BOTANICAL / COMMON NAME	CONT	CAL	SIZE
JUN VIR	12	JUNIPERUS VIRGINIANA / EASTERN RED CEDAR	B & B		6'-8' HGT.
PIN STR	28	PINUS STROBUS / WHITE PINE	B & B		6'-7' HGT.

FLOWERING TREES	QTY	BOTANICAL / COMMON NAME	CONT	CAL	SIZE
COR FLO	5	CORNUS FLORIDA / EASTERN DOGWOOD	B & B	2" CAL.	

CLUMP TREES	QTY	BOTANICAL / COMMON NAME	CONT	CAL	SIZE
BET NIG	12	BETULA NIGRA / RIVER BIRCH MULTI-TRUNK	B & B		10-12' HGT.

SHRUBS	QTY	BOTANICAL / COMMON NAME	SIZE	SIZE	SP
AME CAN	5	AMELANCHIER CANADENSIS / SHADBLOW SERVICEBERRY MULTITRUNK	B & B	5'-6' HGT.	
ILE GLA	13	ILEX GLABRA 'SHAMROCK' / INKBERRY	B & B	2.5'-3' HGT.	

NOTE:
RETAIN STONEWALL ALONG FRONTAGE (EXCEPT DRIVEWAY ACCESS AREAS). RETAIN STONEWALLS WITHIN THE PROPERTY TO THE MAXIMUM EXTENT FEASIBLE.

FINE GRADE LOAM AND SEED ALL DISTURBED AREAS WITH N.E. WARM SEASON GRASS MIX.

REVISIONS	
APRIL 24, 2023	BOARD OF HEALTH PEER REVIEW
MAY 10, 2023	PLANNING BOARD PEER REVIEW

20 0 20 40 60

Scale 1" = 20'

SITE PLAN

ASSESSORS MAP F9 LOT 11 & 12C
#0 &74 CONGRESS STREET
PEMBROKE, MASSACHUSETTS

KEVIN S. GRADY CIVIL No. 46264 REGISTERED PROFESSIONAL ENGINEER

PREPARED FOR:
WHATBARN, LLC
29 DUCK HILL ROAD
DUXBURY MA 02332

MARCH 13, 2023
SCALE: AS NOTED
JOB No. 22-286

LANDSCAPE

GRADY CONSULTING, L.L.C.
Civil Engineers, Land Surveyors & Landscape Architects
71 Evergreen Street, Suite 1, Kingston, MA 02364
Phone (781) 585-2300

NOTES:
ON TREES BELOW 3" CAL.
USE WOOD STAKES.

ON TREES 3" CAL. OR GREATER
USE GUYING CABLES.

IF GUYING CABLES USE 3 PER TREE

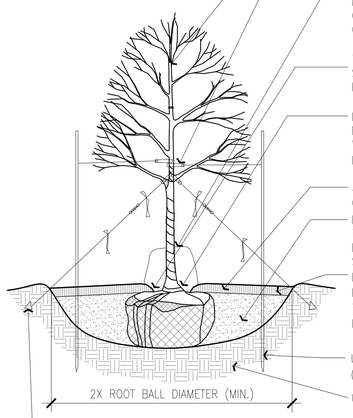

INSTALL TREE PLUMB – L.A. TO APPROVE FACE / ORIENTATION OF TREES ON SITE

NON-GURDELING STRAP SUCH AS CHAIN LOCK OR ARBORTAPE

INSTALL TREE GATORS ON ALL TREES NOT COVERED BY IRRIGATION AS PER MANUFACTURERS SPECIFICATIONS. CONTRACTOR TO MAINTAIN DURING PERIOD OF WARRANTY

TREE SHALL BE PLANTED ;3" ABOVE SURROUNDING GRADE – TREE SHALL BE PLUMB AFTER SETTLEMENT

IF ROOTBALL IS WRAPPED IN PLASTIC OR NON-BIODEGRADEABLE MATERIAL REMOVE ENTIRE WRAP – IF WRAPPED IN BURLAP, CUT OPEN AT LEAST 1/3 OF TOP

3" PINE BARK MULCH (UNLESS OTHERWISE NOTED ON PLANS)

HAND EXCAVATE HOLE TO DIAMETER 2X WIDER THAN ROOT BALL – PRUNE ROOT FLARE – BACKFILL HOLE WITH PLANTING SOIL MIX AS SPECIFIED

EARTH SAUCER TO CONTAIN 3" MULCH – PULL MULCH 3-6" AWAY FROM TRUNK OF TREE (KNOCKDOWN/REMOVE SAUCER AFTER FIRST SEASON)

USE 2"X2" HARDWOOD STAKE (FOR BELOW 3" CAL.)

UNDISTURBED SUBGRADE

USE DUCKBILL TREE ANCHOR FOR 3" CAL. OR GREATER

NOTE:
FOR ALL FALL PLANTING, WRAP TRUNK AS SPECIFIED TO 2ND LOWEST BRANCH – REMOVE THE FOLLOWING SPRING

ALL TREES SHALL BE FLOODED TWICE DURING THE FIRST 24 HOURS AFTER PLANTING

PLANTING SOIL MIX:

1/3 PEAT – BLEND MANURE
1/3 HIGH ORGANIC LOAM
1/3 EX. SOIL

1 SHADE / FLOWERING TREE DETAIL

1/2" = 1'-0" 329343.01-01

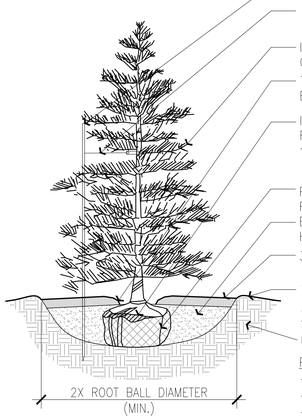

USE 2"X2" HARDWOOD STAKE

LOCATE ANCHOR STAKE 18" AWAY FROM TREE TRUNK ON SIDE OF PREVAILING WIND.

INSTALL TREE PLUMB – L.A. TO APPROVE FACE/ORIENTATION OF TREES ON SITE

TREE SHALL BE PLANTED ;3" ABOVE SURROUNDING GRADE – TREE SHALL BE PLUMB AFTER SETTLEMENT

IF ROOTBALL IS WRAPPED IN PLASTIC OR NON-BIODEGRADEABLE MATERIAL REMOVE ENTIRE WRAP – IF WRAPPED IN BURLAP, CUT OPEN AT LEAST 1/3 OF TOP & REMOVE ALL TWINE/ ROPE.

PULL WIRE CAGE BACK DOWN INTO PLANTING HOLE 1/3 HEIGHT OF ROOTBALL

EXCAVATE HOLE TO DIAMETER 2X WIDER THAN ROOT BALL – BACKFILL HOLE WITH PLANTING MIX AS SPECIFIED

3" PINE BARK MULCH (UNLESS OTHERWISE NOTED ON PLANS)

TEMPORARY EARTH SAUCER TO CONTAIN 3" MULCH – PULL MULCH 3-6" AWAY FROM TRUNK OF TREE (KNOCKDOWN/REMOVE SAUCER AFTER FIRST SEASON)

UNDISTURBED SUBGRADE

PLANTING STANDARD SOIL MIX:

1/3 PEAT – MANURE BLEND
1/3 HIGH ORGANIC LOAM
1/3 EXISTING SOIL

2 EVERGREEN TREE DETAIL

1/2" = 1'-0" 329343.04-01

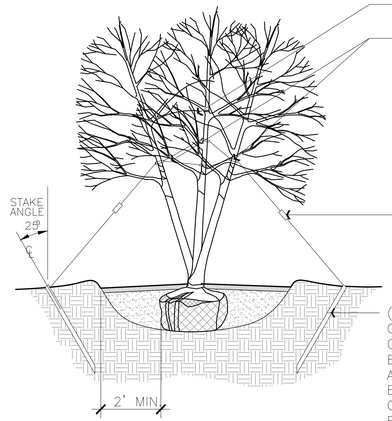

HOSE LOOP TO PROTECT TREE

INSTALL GUY ON EACH MAJOR STEM & WIRE ALL MAJOR STEMS TOGETHER ATTACH 13 GAUGE GALV. MALLEABLE STEEL GUY WIRE 2/3 HEIGHT OF THE TREE IN REINFORCED RUBBER HOSE WITH CABLE CLAMPS – SECURE BY TWISTING TAUTLY

GALVANIZED TURNBUCKLES – 1 PER CABLE

(3) 2"x3"x4' FIR POSTS – ATTACH GALVANIZED MALLEABLE STEEL CABLE TO POST AND SECURE BY TWISTING TAUTLY – SET ANGLE OF POST & GUY TO ENTER GROUND AT THE LIMIT OF THE SPREAD OF THE BOTTOM BRANCHES – STAKES SHALL BE OUTSIDE OF TREE PIT

3 TREE GUYING DETAIL - MULITSTEM

1/2" = 1'-0" 329343.02-01

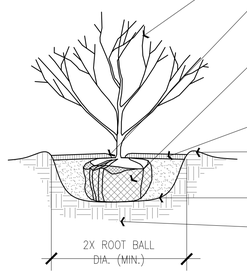

REMOVE ALL DEADWOOD (DO NOT REMOVE ANY OTHER VEGETATION)

SHRUBS SHALL BE PLANTED 2" ABOVE SURROUNDING GRADE – SHRUBS SHALL BE PLUMB AFTER SETTLEMENT

CUT AND REMOVE BURLAP FROM TOP 1/3 OF ROOTBALL. IF ROOTBALL IS WRAPPED IN PLASTIC OR NON-BIODEGRADEABLE MATERIAL REMOVE ENTIRE WRAP

3" PINE BARK MULCH (UNLESS OTHERWISE NOTED ON PLANS)

TEMPORARY MOUND WITH EXCAVATED SOIL TO 3" ABOVE FINISHED GRADE

BACKFILL WITH PLANTING STANDARD MIX

ROOTBALL ON UNDISTURBED SUBGRADE

PLANTING STANDARD SOIL MIX:

1/3 PEAT – MANURE BLEND
1/3 HIGH ORGANIC LOAM
1/3 EXISTING SOIL

4 SHRUB DETAIL

1" = 1'-0" 329333.00-02

LOCATION	DEPTH	DESCRIPTION
GENERAL PLANTING BEDS	6"	1/3 PEAT – MANURE BLEND 1/3 HIGH ORGANIC LOAM 1/3 EXISTING SOIL
FLOWER BEDS	6"	SCREENED LOAM 1/3 PEAT – MANURE BLEND LIME – PELATIZED OR GROUND (50 LB. PER 100 SF.) GROUND BONE MEAL (50 LB. PER 100 SF.) 10-10-10 INORGANIC FERTILIZER (50 LB. PER 5000 SF.)
LAWNS – SOD & SEED	6"	6" SCREENED LOAM
PITS/TREE WELLS "STANDARD MIX" FOR BACKFILL	12"	SOIL MIX 'A' – 1/3 PEAT – MANURE BLEND 1/3 HIGH ORGANIC LOAM 1/3 EXISTING SOIL
PITS/TREE WELLS "LITE WEIGHT MIX"	12"	SOIL MIX 'B' – 70% LIGHT WEIGHT SHALE 20% SAND 10% COMPOST
PITS/TREE WELLS "STRUCTURAL MIX"	12"	SOIL MIX 'C' – MIX COMPOSITION TO BE SUPPLIED BY LANDSCAPE ARCHITECT.

5 SCHEDULE OF TOPSOILS & ADDITIVES

1" = 1'-0" 329301.03-01

PLANTING NOTES

1) NOTIFY DIG-SAFE AND LOCAL AUTHORITIES PRIOR TO ANY TYPE OF SITE PREPARATION OR CONSTRUCTION
2) ALL PLANTS TO HAVE THE SAME RELATIONSHIP TO FINISH GRADE AFTER SETTLEMENT AS TO THEIR ORIGINAL GRADE BEFORE DIGGING. LOCATE PLANT COLLAR TWO OR THREE INCHES HIGHER THAN PLANTING SOIL MIX TO INSURE CORRECT FINAL RELATIONSHIP.
3) APPLY AN APPROVED ANTI-DESSICANT TO ALL PLANTS IN LEAF AT PLANTING TIME, AND TO ALL EVERGREENS BEFORE THEIR FIRST WINTER.
4) FLOOD ALL PLANTS WITH CLEAN WATER TWICE IN THE FIRST 24 HOURS AFTER PLANTING. CONTRACTOR TO ARRANGE FOR ALL PLANTS TO BE PLANTED WITHIN THREE DAYS AFTER DELIVERY TO THE SITE UNLESS OTHERWISE APPROVED BY THE LANDSCAPE ARCHITECT.
5) NEVER CUT A LEADER.
6) TRIM ONLY BROKEN OR DEAD BRANCHES FROM EVERGREEN PLANTS.
7) THE CONTRACTOR SHALL SUPPLY ALL PLANT MATERIAL AND MULCH IN SUFFICIENT QUANTITIES TO COMPLETE PLANTING AS SHOWN ON THE DRAWINGS. DRAWING QUANTITIES TAKE PRECEDENCE OVER PLANT LIST QUANTITIES.
8) ALL PLANT MATERIAL SHALL CONFORM TO THE GUIDELINES BY "THE AMERICAN STANDARD FOR NURSERY STOCK," PUBLISHED BY THE AMERICAN ASSOCIATION OF NURSERYMEN, INC.
9) ALL TREES SHALL HAVE "BEST FACE" SIDE TAGGED AT NURSERY PRIOR TO DIGGING.
10) ALL PLANTS SHALL BE BALLED AND BURLAPPED OR CONTAINER GROWN, UNLESS OTHERWISE APPROVED BY THE LANDSCAPE ARCHITECT.
11) CONTRACTOR TO STAKE TREE LOCATIONS FOR APPROVAL BY LANDSCAPE ARCHITECT.
12) LANDSCAPE ARCHITECT TO APPROVE IN PLACE ALL SHRUBS, PERENNIALS AND VINES PRIOR TO PLANTING.
13) ALL TREES TO RECEIVE A MINIMUM OF THREE INCHES OF MULCH. ALL SHRUBS, VINES AND GROUND COVERS TO RECEIVE A MINIMUM OF TWO INCHES OF MULCH.
14) WHERE SPECIFIED, CALIPER SIZE TO BE OVERRIDING FACTOR IN TREE SELECTION.
15) STAKE OR GUY ALL TREES AND LARGE EVERGREEN MATERIAL.
16) CONTRACTOR TO PROVIDE TWO YEAR GUARANTEE ON ALL MATERIAL. CONTRACTOR TO MAINTAIN ALL PLANTING AND LAWNS UNTIL FINAL PROJECT ACCEPTANCE. GUARANTEE PERIOD TO BEGIN AT FINAL ACCEPTANCE.
17) ALL PLANT MATERIAL SHALL BE INSTALLED PRIOR TO FINAL TOP-DRESSING AND SODDING/SEEDING.
18) COORDINATE LANDSCAPE INSTALLATION WITH INSTALLATION OF UNDERGROUND SPRINKLER SYSTEM & LANDSCAPE LIGHTING (IF APPLICABLE).
19) NO PLANTING BEFORE THE ACCEPTANCE OF ROUGH GRADING.
20) CONTRACTOR TO PROVIDE SOIL TESTS IN AREAS DESIGNATED BY LANDSCAPE ARCHITECT IN FIELD FOR EXISTING SOILS TO DETERMINE APPROPRIATE SOIL AMENDMENTS PRIOR TO THE DISTURBANCE OF SITE.
21) ALL PLANTING BEDS TO BE TREATED WITH PREEN AND GREEN OR APPROVED EQUAL TO PROHIBIT WEED GERMINATION AND GROWTH PRIOR TO THE SPREADING OF MULCH.
22) ALL PERENNIALS ARE TO BE PLANTED INTO DAMP SOIL.
23) PLANT LIST: A COMPLETE LIST OF PLANTS INCLUDING A SCHEDULE OF QUANTITIES, SIZES, TYPES AND NAMES IS INCLUDED IN THIS SET OF DRAWINGS. IN THE EVENT OF DISCREPANCIES BETWEEN QUANTITIES OF PLANTS IN THE PLANT LIST AND THE QUANTITIES SHOWN ON THE DRAWINGS, THE PLAN SHALL GOVERN. WHEN MULTIPLE PLANT SPECIES ARE LISTED IN ONE PLANT CATEGORY, THE GOAL IS TO PROVIDE THE BEST PLANTS AVAILABLE AT THE TIME OF INSTALLATION. THE LANDSCAPE ARCHITECT SHALL SELECT OR COORDINATE THE SELECTION OF THE APPROPRIATE PLANTS AT LOCAL NURSERIES. GRADY CONSULTING HAS THE RIGHT TO REJECT ANY PLANT THAT DOES NOT MEET THE SPECIFICATIONS LISTED IN THE PLANT TABLE.
24) PLANT SUBSTITUTION ARE NOT ALLOWED UNLESS APPROVED BY LANDSCAPE ARCHITECT.
25) ALL DISTURBED AREAS TO BE LOAMED AND SEEDED AND BLENDED INTO EXISTING GRADE AND CONDITIONS (REFER TO ENGINEER'S SOIL STABILIZATION AND EROSION CONTROL PLAN FOR FURTHER INFORMATION).
26) CONTRACTOR SHALL (IF APPLICABLE) REVIEW WITH CLIENT ALL IRRIGATION PROCEDURES AND PROCESSES (i.e. TIMERS, ZONES AND ALL OTHER ITEMS INVOLVED W/ THE IRRIGATION SYSTEM).

REVISIONS	
APRIL 24, 2023	BOARD OF HEALTH PEER REVIEW
MAY 10, 2023	PLANNING BOARD PEER REVIEW

COMMONWEALTH OF MASSACHUSETTS
KEVIN S. GRADY
CIVIL
No. 46264
REGISTERED PROFESSIONAL ENGINEER

SITE PLAN

ASSESSORS MAP F9 LOT 11 & 12C
#0 &74 CONGRESS STREET
PEMBROKE, MASSACHUSETTS

PREPARED FOR:
WHATBARN, LLC
29 DUCK HILL ROAD
DUXBURY MA 02332

MARCH 13, 2023
SCALE: AS NOTED
JOB No. 22-286

GRADY CONSULTING, L.L.C.
Civil Engineers, Land Surveyors & Landscape Architects
71 Evergreen Street, Suite 1, Kingston, MA 02364
Phone (781) 585-2300

LANDSCAPE DETAILS

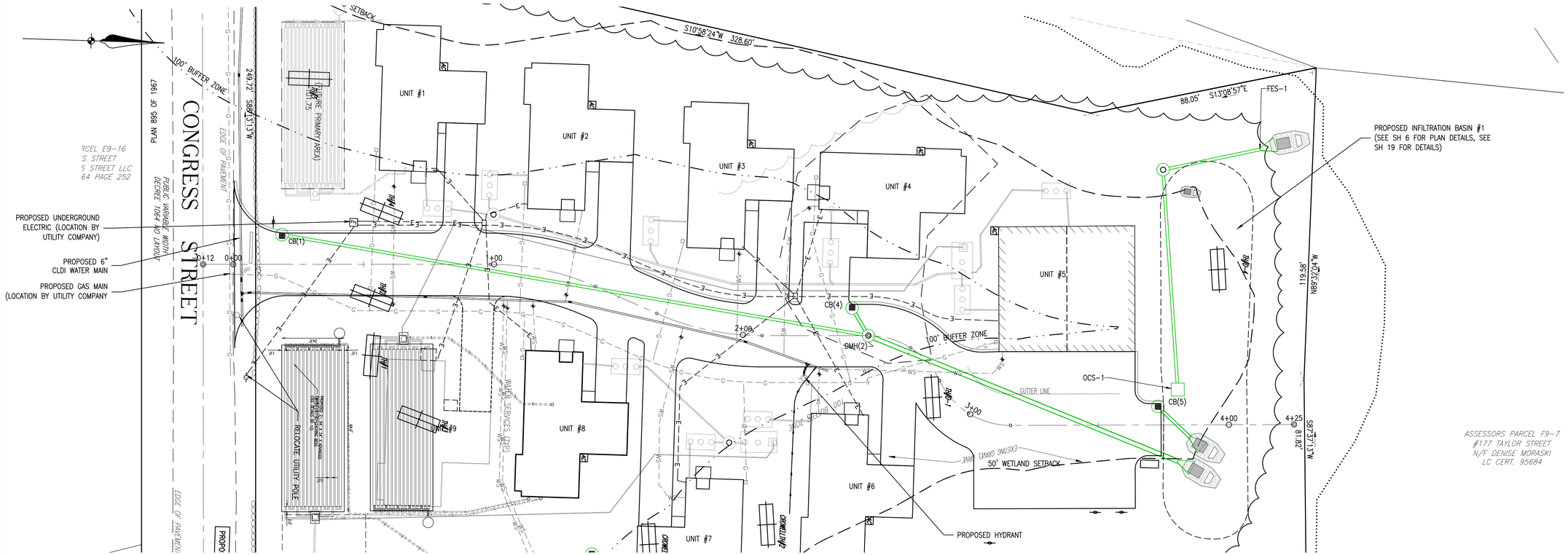

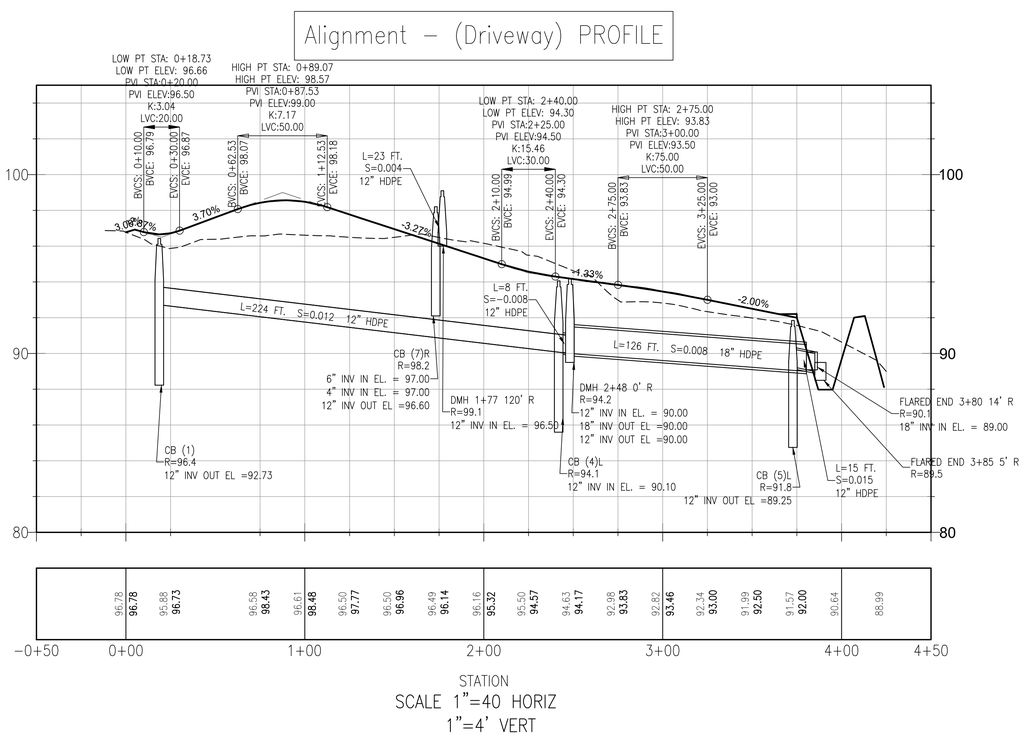

REVISIONS	
APRIL 24, 2023	BOARD OF HEALTH PEER REVIEW
MAY 10, 2023	PLANNING BOARD PEER REVIEW

COMMONWEALTH OF MASSACHUSETTS
KEVIN S. GRADY
CIVIL
No. 46264
REGISTERED PROFESSIONAL ENGINEER

SITE PLAN

ASSESSORS MAP F9 LOT 11 & 12C
#0 &74 CONGRESS STREET
PEMBROKE, MASSACHUSETTS

PREPARED FOR:
WHATBARN, LLC
29 DUCK HILL ROAD
DUXBURY MA 02332

MARCH 13, 2023
SCALE: AS NOTED
JOB No. 22-286

GRADY CONSULTING, L.L.C.
Civil Engineers, Land Surveyors & Landscape Architects
71 Evergreen Street, Suite 1, Kingston, MA 02364
Phone (781) 585-2300

PLAN & PROFILE-DRAIN

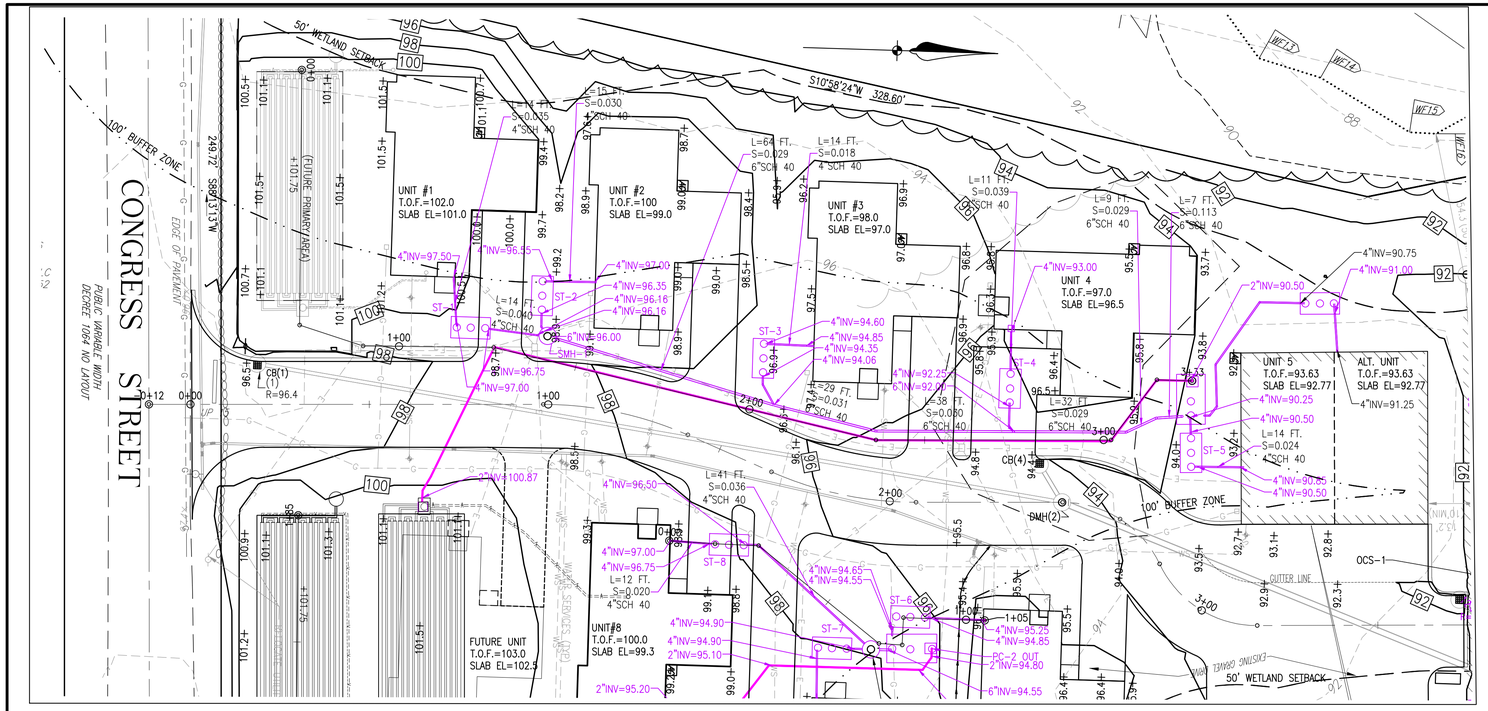

UNITS 1–5 SEPTIC COLLECTION PLAN

SCALE: 1" = 20'

Scale 1" = 20'

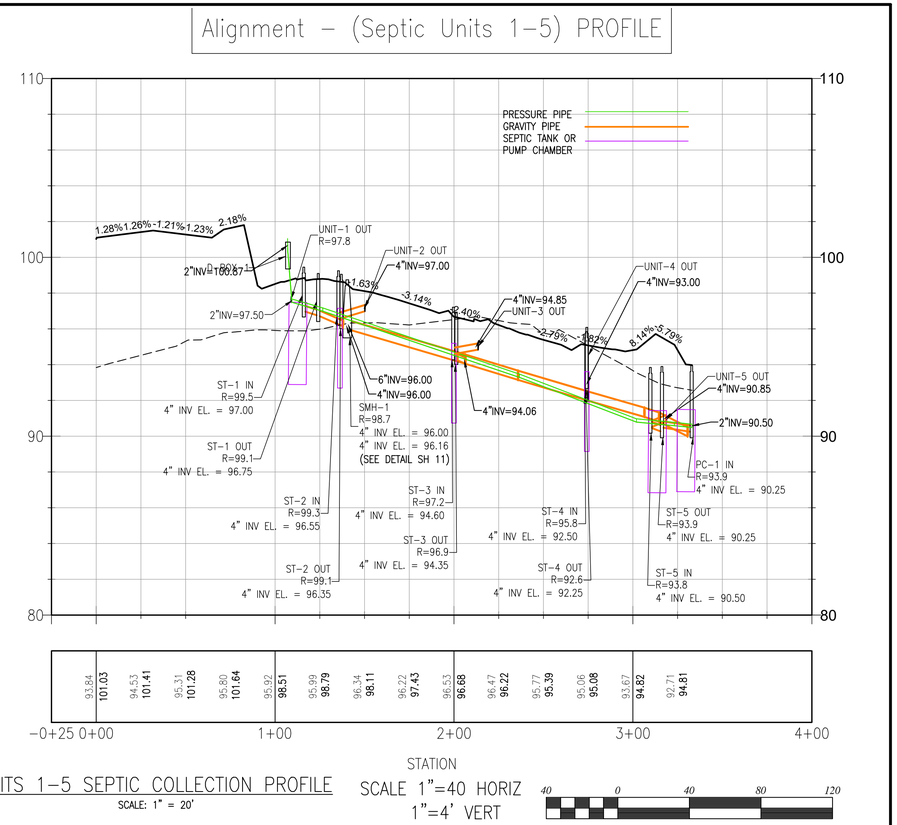

UNITS 1–5 SEPTIC COLLECTION PROFILE

SCALE: 1" = 20'

SCALE 1"=40 HORIZ
1"=4' VERT

Scale 1" = 40'

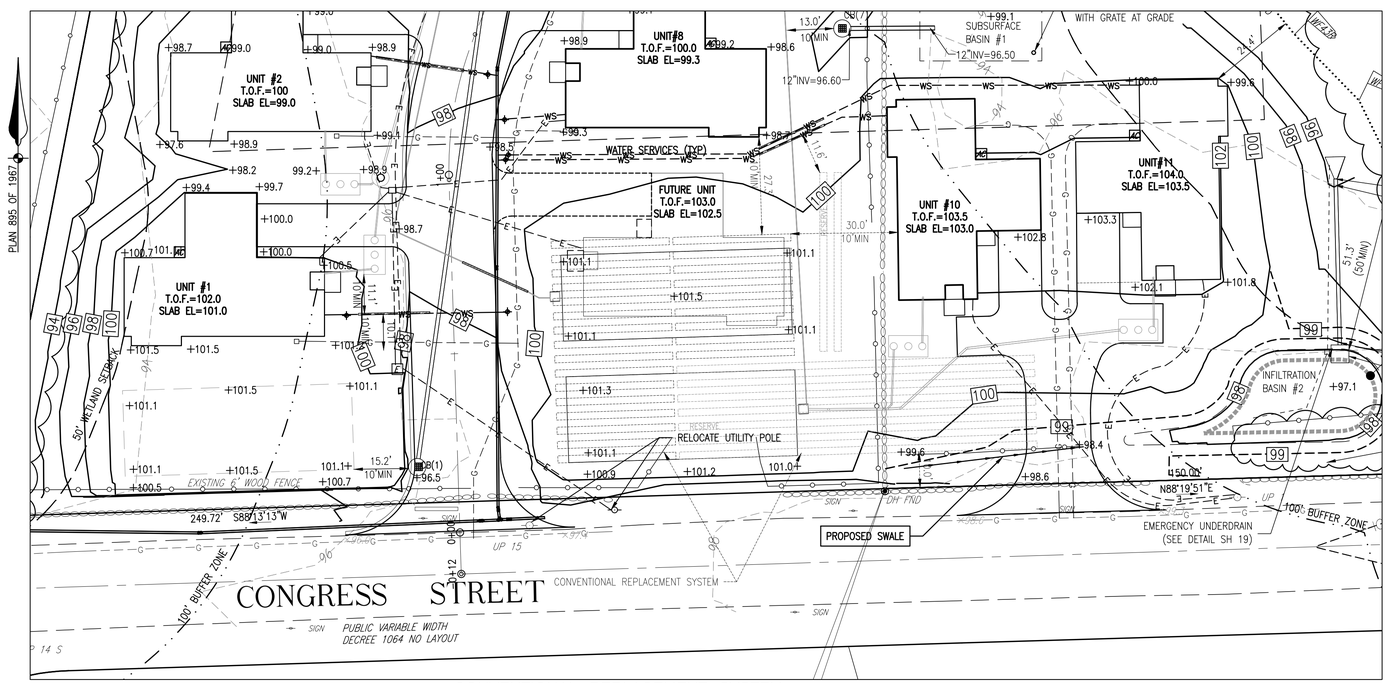

CONVENTIONAL REPLACEMENT SYSTEM

SCALE: 1" = 20'

Scale 1" = 20'

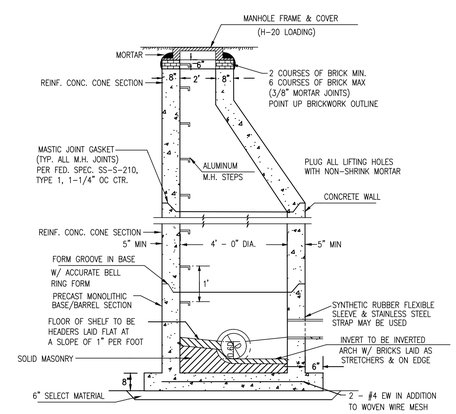

SANITARY SEWER MANHOLE

NOT TO SCALE

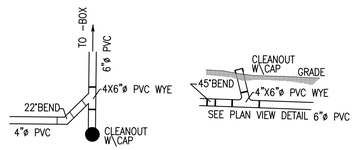

CLEANOUT DETAIL

REVISIONS	
APRIL 24, 2023	BOARD OF HEALTH PEER REVIEW
MAY 10, 2023	PLANNING BOARD PEER REVIEW

NOTE:
1. ALL INDIVIDUAL UNIT SEPTIC TANKS TO BE 1500 GALLON TANKS(SEE DETAIL SH 14).
2. PUMP CHAMBERS TO BE 3000 GALLON TANKS (SEE DETAIL SH 14).
3. FOR PRESBY SYSTEM DETAILS (SEE SH 14).
4. SEE SHEET 13 FOR CONVENTIONAL REPLACEMENT SYSTEM AREA CALCULATIONS.

COMMONWEALTH OF MASSACHUSETTS
KEVIN S. GRADY
CIVIL
No. 46264
REGISTERED PROFESSIONAL ENGINEER

SITE PLAN

ASSESSORS MAP F9 LOT 11 & 12C
#0 &74 CONGRESS STREET
PEMBROKE, MASSACHUSETTS

PREPARED FOR:
WHATBARN, LLC
29 DUCK HILL ROAD
DUXBURY MA 02332

MARCH 13, 2023
SCALE: AS NOTED
JOB No. 22-286

GRADY CONSULTING, L.L.C.
Civil Engineers, Land Surveyors & Landscape Architects
71 Evergreen Street, Suite 1, Kingston, MA 02364
Phone (781) 585-2300

PLAN & PROFILE – SEPTIC

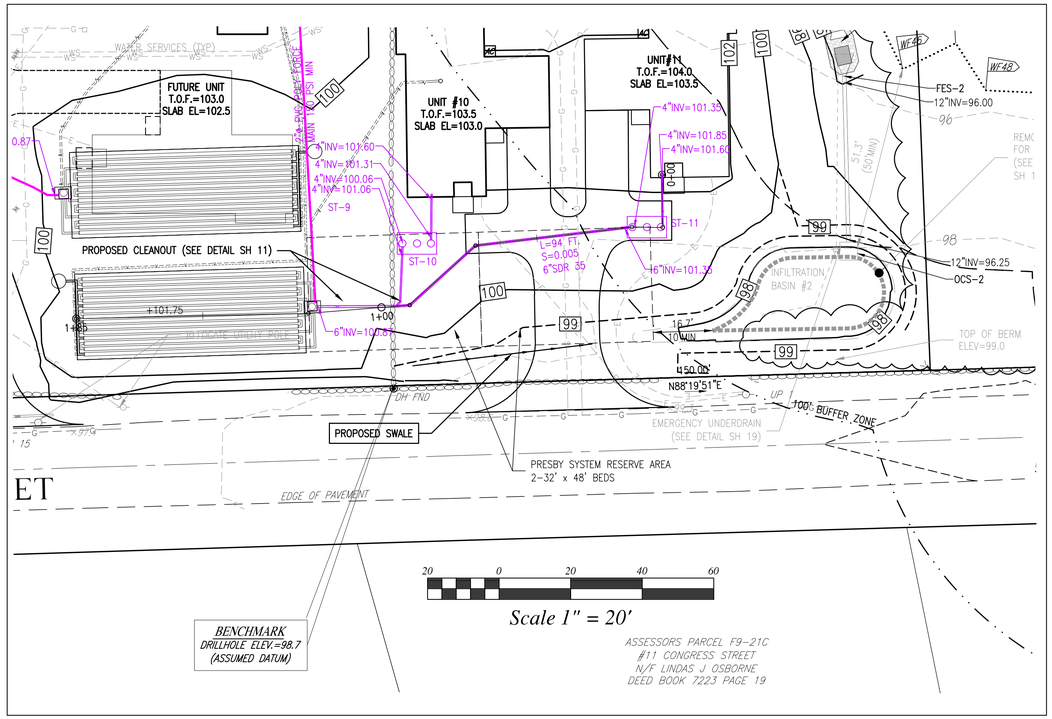

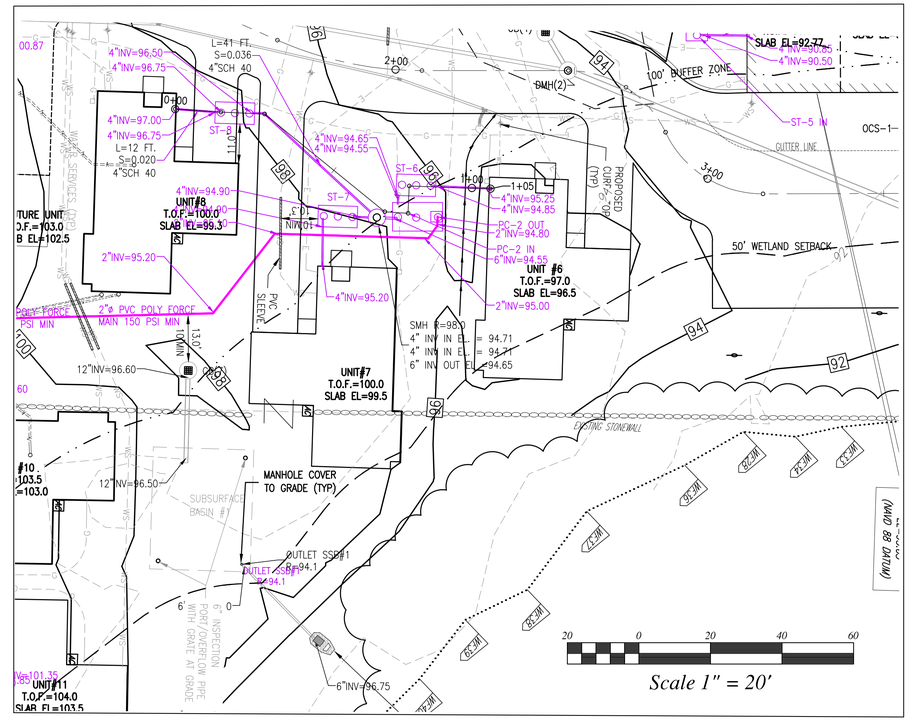

Alignment – (UNITS 9 10 11) PROFILE

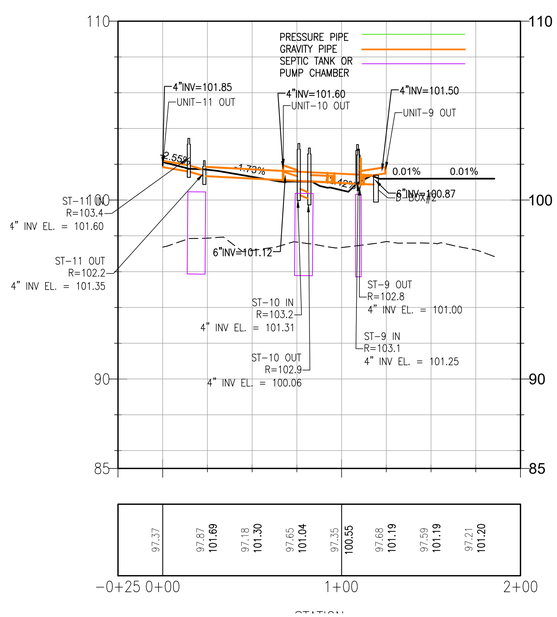

Alignment – (Unit 6 7 8) PROFILE

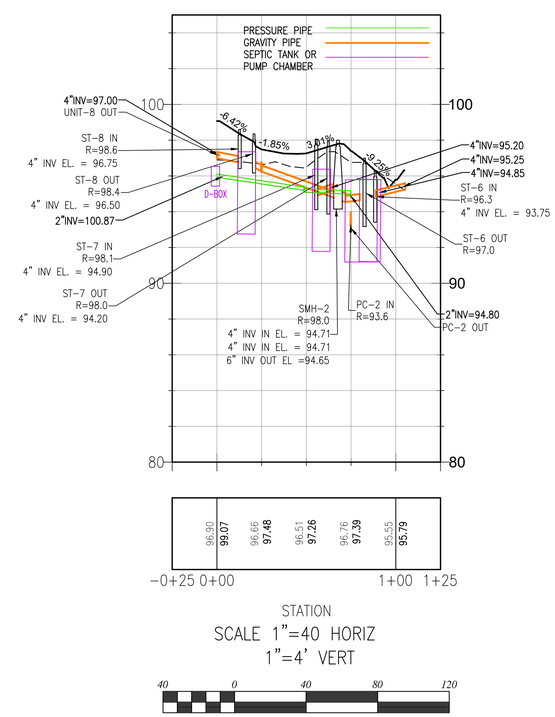

REVISIONS	
APRIL 24, 2023	BOARD OF HEALTH PEER REVIEW
MAY 10, 2023	PLANNING BOARD PEER REVIEW

NOTE:
1. ALL INDIVIDUAL UNIT SEPTIC TANKS TO BE 1500 GALLON TANKS(SEE DETAIL SH 14).
2. PUMP CHAMBERS TO BE 3000 GALLON TANKS (SEE DETAIL SH 14).
3. FOR PRESBY SYSTEM DETAILS (SEE SH 14).
4. SEE SHEET 13 FOR CONVENTIONAL REPLACEMENT SYSTEM AREA CALCULATIONS.

COMMONWEALTH OF MASSACHUSETTS
KEVIN S. GRADY
CIVIL
No. 46264
REGISTERED PROFESSIONAL ENGINEER

SITE PLAN

ASSESSORS MAP F9 LOT 11 & 12C
#0 &74 CONGRESS STREET
PEMBROKE, MASSACHUSETTS

PREPARED FOR:
WHATBARN, LLC
29 DUCK HILL ROAD
DUXBURY MA 02332

MARCH 13, 2023
SCALE: AS NOTED
JOB No. 22-286

GRADY CONSULTING, L.L.C.
Civil Engineers, Land Surveyors & Landscape Architects
71 Evergreen Street, Suite 1, Kingston, MA 02364
Phone (781) 585-2300

PLAN & PROFILE – SEPTIC

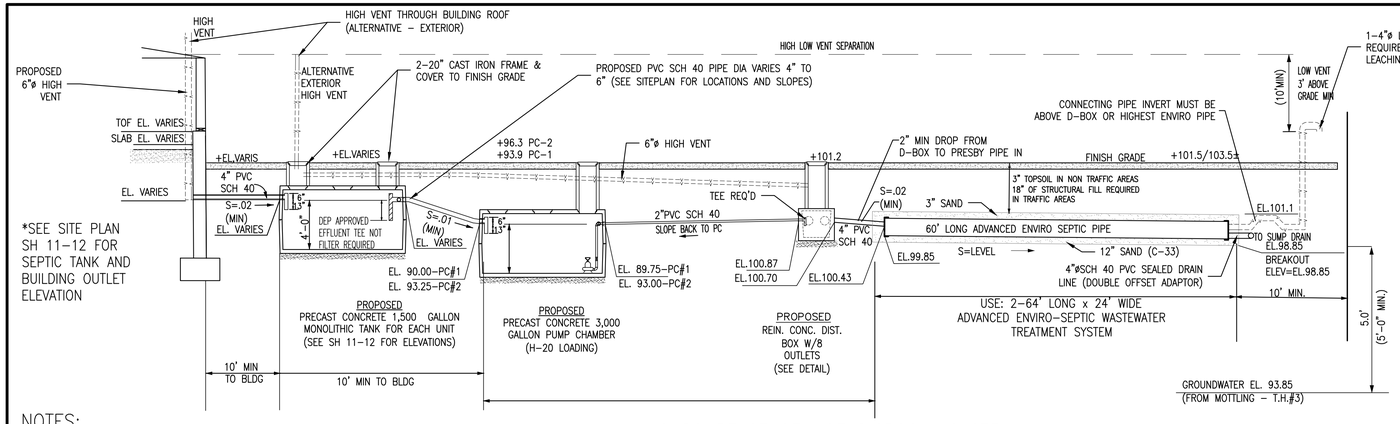

*SEE SITE PLAN SH 11–12 FOR SEPTIC TANK AND BUILDING OUTLET ELEVATION

SUBSURFACE SEWAGE DISPOSAL SYSTEM

NOT TO SCALE

SOIL LOGS

T.H.1	T.H.2	T.H.3	T.H.4	T.H.5
EL. 97.04	EL. 96.61	EL. 97.69	EL. 95.68	EL. 94.20
0"–30" A FILL/LOAM	0"–10" A LOAM	0"–18" A LOAM	0"–10" A LOAM	0"–4" A LOAM
94.54	95.77	96.19	94.84	93.87
30"–44" C1 LOAMY SAND	10"–24" B LOAMY SAND	18"–40" B LOAMY SAND	10"–24" B LOAMY SAND	4"–18" B SANDY LOAM
93.37	94.61	94.35	93.68	92.70
44"–132" C1 MEDIUM SAND; PERC ☒ @ 40"–58" P.R.=4 MIN/IN	24"–54" C1 LOAMY SAND		24"–54" C1 LOAMY SAND	18"–66" C1 SANDY LOAM
	92.11		91.18	88.70
	54"–120" C1 MEDIUM LOAMY SAND; PERC ☒ @ 53"–71" P.R.=4 MIN/IN	40"–120" C1 MEDIUM LOAMY SAND; PERC ☒ @ 42"–60" P.R.<2 MIN/IN	54"–120" C1 MEDIUM LOAMY SAND	66"–120" C2 LOAMY SAND
86.04	86.61	87.69	85.68	84.20
D=11'–0" MOTTLING @ 3'–4" (EL=93.70)	D=10'–0" MOTTLING @ 3'–4" (EL=93.27)	D=10'–0" MOTTLING @ 3'–10" (EL=93.85)	D=10'–0" MOTTLING @ 3'–4" (EL=92.34)	D=10'–0" MOTTLING @ 2'–6" (EL=91.70)

T.H. D–1	T.H. D–2	T.H. D–3	T.H. D–4	T.H. D–5	T.H. D–6
EL. 93.00	EL. 97.00	EL. 98.10	EL. 91.24	EL. 95.90	EL. 96.10
0"–8" FILL/LOAM		0"–20" FILL	0"–80" FILL		0"–9" FILL/LOAM
92.33		96.43	84.57		95.35
8"–14" A LOAM	0"–120" SANDY FILL			0"–20" FILL	
91.83					9"–24" B SANDY LOAM
14"–20" B LOAMY SAND		20"–76" C1 SANDY LOAM	80"–110" C1 MEDIUM SAND		
91.33				94.23	94.10
20"–72" C1 LOAMY SAND				20"–48" FILL SAND	
87.00		91.76	82.07		24"–54" C1/FILL LOAMY SAND/PERC SAND
72"–108" C2 MEDIUM LOAMY SAND		76"–108" C1 MEDIUM TO COARSE SAND	110"–126" C2 LOAMY SAND		
84.00	87.00	89.10	80.74	91.90	91.60
D=9'–0" MOTTLING @ 3'–0" (EL=90.00)	D=10'–0"	D=9'–0" MOTTLING @ 3'–0" (EL=95.10)	D=10'–6" MOTTLING @ 9'–6" (EL=81.74)	D=4'–0" MOTTLING @ 3'–4" (EL=92.56)	D=4'–6" MOTTLING @ 2'–10" (EL=93.27)

SEPTIC DESIGN FLOW

(NOT DESIGNED FOR GARBAGE GRINDER)

1. DESIGN DAILY FLOW

UNITS		BEDROOMS	TOTAL BR			DESIGN FLOW
11	–	2 BR UNITS	22	X150 GPD/BR	=	3,300 GPD

CAPACITY 22 BR X 150 = 3,300 GPD

2. PERC RATE: P.R. =6 MIN/IN CLASS I

ENVIRO–SEPTIC DESIGN

(NOT DESIGNED FOR GARBAGE GRINDER)

*USE 3,300 GPD FOR ENVIRO–SEPTIC DESIGN CRITERIA

TITLE 5 MINIMUM AREA = 3,300 GPD / 0.70 GPD/S.F. = 4,714 S.F.
PER CERTIFICATION FOR GENERAL USE SECTION 13 TABLE B LTAR =1.4 GPD/SF

3,300 GPD / 1.4 GPD/SF = 2,357 SF MIN
USE: 2–64' LONG x 24' WIDE ENVIRO–SEPTIC PIPE LEACHING BED SYSTEM

PROPOSED AREA: 2 X 64 X 24 =3,072 GPD > 3,300 GPD

ENVIRO–SEPTIC PIPE REQUIRED

420 LF FOR FIRST 6 BR + (70 L.F. X 16 BR) = 1,540 LF REQUIRED – 1,800 LF PROPOSED
2 X 15–60 FT PIPES IN 5 COMBINATION SERIAL SECTIONS EACH

ENVIRO–SEPTIC MAX FLOW PER SERIAL SECTION = 500 GPD LOADING RATE
3,300 / 500 = 6.6 SERIAL SECTIONS EACH = 13.2, 15 PROVIDED EACH

CONVENTIONAL REPLACEMENT AREA

LEACHING FIELDS: P.R. = 6 MIN/IN

TITLE 5 MINIMUM AREA = 3,300 GPD / 0.70 GPD/S.F. = 4,714 S.F.
USE 8 –100' LONG X 2' WIDE X 2' DEEP LEACHING TRENCHES

8 X 100 X 6 SF/LF = 4,800 X 0.70 = 3,360 > 3,300 GPD
24 X 33 X 6 SF/LF = 4,752 X 0.70 = 3,326 > 3,300 GPD

SEPTIC TANK DESIGN
PEMBROKE LOCAL REGULATION 15.290 SHARED SYSTEMS
REQUIRE EACH UNIT TO HAVE THEIR OWN INDIVIDUAL SEPTIC TANK

2 BR X 150 GPD/BR = 300 GPD x 2 = 600: USE 1,500 GAL (MIN)

ALTERNATIVE SYSTEM APPROVAL REFERENCE

THIS SYSTEM HAS BEEN DESIGNED IN ACCORDANCE WITH THE COMMONWEALTH OF MASSACHUSETTS DEPARTMENT OF ENVIRONMENTAL PROTECTION MODIFIED CERTIFICATION FOR GENERAL USE, PURSUANT TO TITLE V, 310 CMR 15.000, REVISED DECEMBER 17, 2013, MODIFIED OCTOBER 30, 2019, MODIFIED FEBRUARY 2, 2022 AND STANDARD CONDITIONS FOR ALTERNATIVE SOIL ABSORPTION SYSTEMS WITH GENERAL USE CERTIFICATION AND/OR APPROVED FOR REMEDIAL USE REVISED MARCH 5, 2018. A DISCLOSURE NOTICE IN THE DEED TO THE PROPERTY IS REQUIRED FOR SYSTEMS INSTALLED UNDER THE REMEDIAL USE APPROVAL.

NOTES:

1. SOILS TESTING BY KEVIN GRADY, GRADY CONSULTING WITNESSED BY LISA CULLITY AUGUST 11, 2022 AND MAY 15, 2023.
2. CALL DIG SAFE 1–888–344–7233 AT LEAST 4 DAYS PRIOR TO COMMENCEMENT OF CONSTRUCTION.
3. NOTIFY TOWN AND GRADY CONSULTING PRIOR TO BACKFILLING OF SYSTEM.
4. NO KNOWN WELLS EXIST WITHIN 200' OF THE PROPOSED SYSTEM
5. THE SITE IS NOT LOCATED IN AN AQUIFER PROTECTION ZONE II.
6. ALL SYSTEM COMPONENTS SHALL BE MARKED WITH MAGNETIC MARKING TAPE OR A COMPARABLE MEANS IN ORDER TO LOCATE THEM ONCE BURIED (310 CMR 15.221(12))
7. THE SITE NOT IS LOCATED IN A FLOOD PLAIN DISTRICT ZONE X.
8. NO KNOWN EASEMENTS ARE IN THE AREA OF THE PROPOSED SYSTEM.
9. EXCAVATE ALL MATERIAL (A, B, LAYER) TO MEDIUM LOAMY SAND C1 LAYER (44" TH#1, 54", TH #4), 5' AROUND SYSTEM. REPLACE WITH CLEAN COURSE SAND IN ACCORDANCE WITH 310 CMR 15.255 (3). EXCAVATION TO BE INSPECTED BY GRADY CONSULTING L.L.C. AND TOWN PRIOR TO SOIL REPLACEMENT.

SYSTEM #1 (*PRESBY AES DOES NOT REQUIRE 5 FT OVER DIG)
APPROXIMATE PRESBY (C–33 SAND) SAND VOLUME = 64 X 21 SF X (2 FT DEEP) / 27 + 20% = 120± C.Y.
APPROXIMATE PERC SAND VOLUME = 64 X 21 (98.35 – 94.85±) / 27 + 20% = 210± C.Y.

SYSTEM #2
APPROXIMATE PRESBY (C–33 SAND) SAND VOLUME = 64 X 21 SF X (2 FT DEEP) / 27 + 20% = 120± C.Y.
APPROXIMATE PERC SAND VOLUME = 64 X 21 (98.35 – 94.85±) / 27 + 20% = 210± C.Y.

10. DISTANCE TO WETLANDS MUST BE OBSERVED AS REQUIRED IN THE "RULES". 75 FEET FROM HOUSE SEWAGE SYSTEM AND 100 FEET FROM COMMERCIAL OR MULTIPLE DWELLINGS OF MORE THAN TWO UNITS. IF LESS THAN 100 FEET OR ANY WORK WITHIN 100_FEET OF THE WETLANDS A NOTICE OF INTENT MUST BE FILED. ***A NOTICE OF INTENT HAS BEEN FILED****

PERC TESTS

PERC #	PERFORMED BY: / WITNESSED BY:	DATE	DEPTH	RATE
1	ROBERT CROWELL / LISA CULLITY	3–24–14	29"	2 MPI
2	ROBERT CROWELL / LISA CULLITY	3–24–14	25"	2 MPI

DEEP HOLES

TEST PIT #	PERFORMED BY: / WITNESSED BY:	DATE
1 & 2	ROBERT CROWELL / LISA CULLITY	3–24–14

TP NO. 1 (REMOVE & REPLACE)

SOIL HOR.	SOIL TEXTURE	SOIL COLOR	SOIL MOTTLING	OTHER
FILL	––	––		––
A	SL	10YR3/2		FRIABLE
B	SL	10YR5/6	@ 64"	FRIABLE
C	LS	2.5Y 6/3		LOOSE

0" 99.4; 25" 98.3; 32" 96.7; 43" 94.0; 120" 89.4

GND WATER/MOTTLING = 64"
ADJ. GROUDWATER =94.1

TP NO. 2 (REMOVE & REPLACE)

SOIL HOR.	SOIL TEXTURE	SOIL COLOR	SOIL MOTTLING	OTHER
FILL/A	SL	10YR3/2		FRIABLE
B	SL	10YR5/6	@54"	FRIABLE
C	LS	10YR5/6		LOOSE

0" 97.9; 18" 96.4; 27" 95.6; 120" 87.9

GND WATER = 54"
ADJ. GROUDWATER =93.4

TEST PITS BY CROWELL ENGINEERING FROM PLAN TITLED "SEWAGE DISPIASL SYSTEM REPAIR 74 CONGRESS ST" DATED JUNE 10, 2014

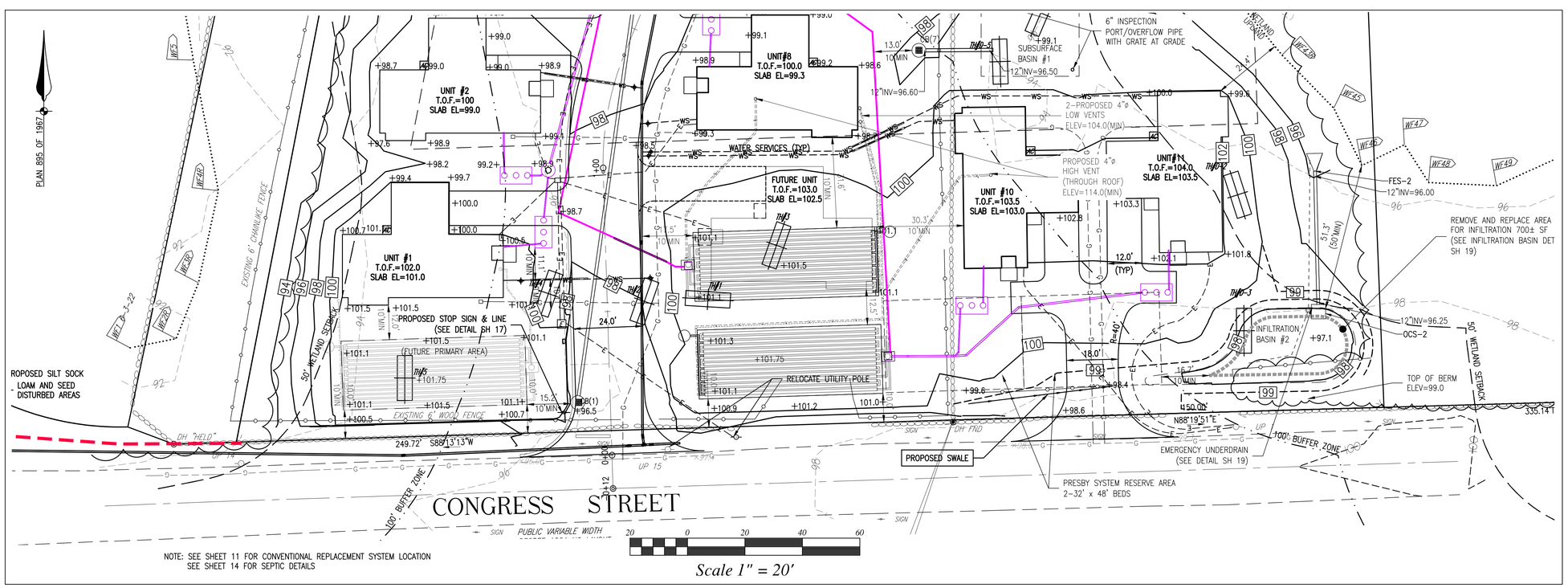

NOTE: SEE SHEET 11 FOR CONVENTIONAL REPLACEMENT SYSTEM LOCATION
SEE SHEET 14 FOR SEPTIC DETAILS

NOTE:
1. ALL INDIVIDUAL UNIT SEPTIC TANKS TO BE 1500 GALLON TANKS(SEE DETAIL SH 14).
2. PUMP CHAMBERS TO BE 3000 GALLON TANKS
3. (SEE DETAIL SH 14)

REVISIONS	
APRIL 24, 2023	BOARD OF HEALTH PEER REVIEW
MAY 10, 2023	PLANNING BOARD PEER REVIEW

COMMONWEALTH OF MASSACHUSETTS
KEVIN S. GRADY
CIVIL
No. 46264
REGISTERED PROFESSIONAL ENGINEER

SITE PLAN

ASSESSORS MAP F9 LOT 11 & 12C
#0 &74 CONGRESS STREET
PEMBROKE, MASSACHUSETTS

PREPARED FOR:
WHATBARN, LLC
29 DUCK HILL ROAD
DUXBURY MA 02332

MARCH 13, 2023
SCALE: AS NOTED
JOB No. 22–286

SEPTIC

GRADY CONSULTING, L.L.C.
Civil Engineers, Land Surveyors & Landscape Architects
71 Evergreen Street, Suite 1, Kingston, MA 02364
Phone (781) 585–2300

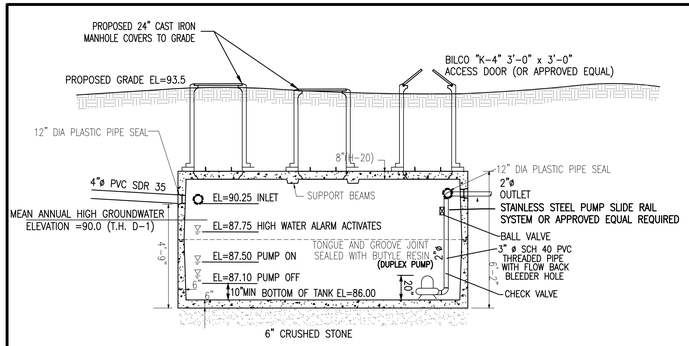

PROVIDE AN EXTERIOR ALARM LOCATED ON BUILDING#4 AND POWERED BY A CIRCUIT SEPARATE FROM THE CIRCUIT TO THE PUMP.
PUMP CONTROL PANEL SHALL HAVE ALL SWITCHES LOCATED WITHIN THE BOX & THE ALARM SILENCE BUTTON ON THE OUTSIDE

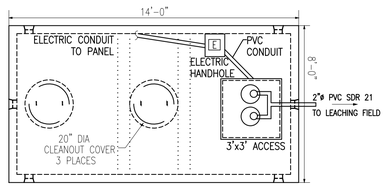

REFERENCE: CAMERON HYDRAULIC DATA, PG 3-38 & GOULDS PUMPS WASTEWATER & SEWAGE

CHAMBER STORAGE CAPACITY

(210 + 45 GAL\DOSE) / 705 GAL/FT OF TANK = 0.36 FT (MIN PER DOSE) USE 0.40 FT
EMERGENCY STORAGE CAPACITY PROVIDED > 24 HR REQUIRED CAPACITY
(2.5 FT x 705 GAL\FT = 1762 GAL.>1650 GPD

*THE PROPOSED PUMP CHAMBER AND RISERS ARE TO BE WATERTIGHT

3000 GALLON PUMP CHAMBER #1

(NOT TO SCALE)

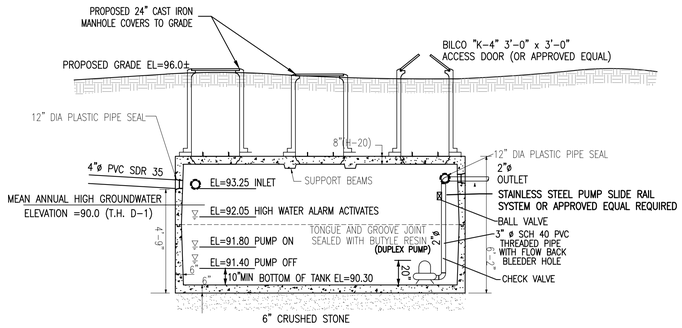

PROVIDE AN EXTERIOR ALARM LOCATED ON BUILDING#4 AND POWERED BY A CIRCUIT SEPARATE FROM THE CIRCUIT TO THE PUMP.
PUMP CONTROL PANEL SHALL HAVE ALL SWITCHES LOCATED WITHIN THE BOX & THE ALARM SILENCE BUTTON ON THE OUTSIDE

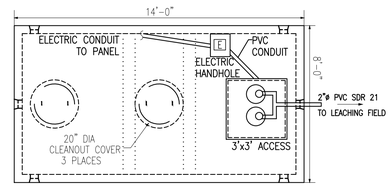

REFERENCE: CAMERON HYDRAULIC DATA, PG 3-38 & GOULDS PUMPS WASTEWATER & SEWAGE

CHAMBER STORAGE CAPACITY

(210 + 45 GAL\DOSE) / 705 GAL/FT OF TANK = 0.36 FT (MIN PER DOSE) USE 0.40 FT
EMERGENCY STORAGE CAPACITY PROVIDED > 24 HR REQUIRED CAPACITY
(2.5 FT x 705 GAL\FT = 1762 GAL.>1650GPD

*THE PROPOSED PUMP CHAMBER AND RISERS ARE TO BE WATERTIGHT

3000 GALLON PUMP CHAMBER #2

(NOT TO SCALE)

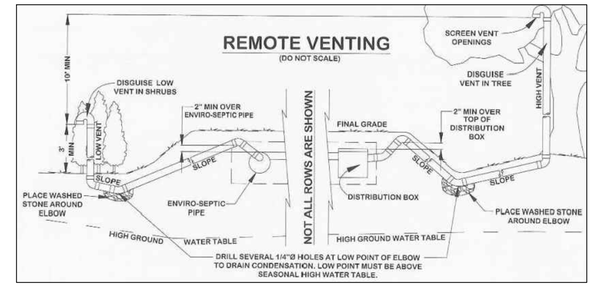

VENTING DETAIL

(NOT TO SCALE)

SYSTEM SAND

ALL CONFIGURATIONS OF ENVIRO-SEPTIC REQUIRE A MINIMUM OF 6" OF SYSTEM SAND SURROUNDING THE CIRCUMFERENCE OF THE PIPE WITH A MINIMUM OF 12" OF SAND BELOW THE PIPE.
PERCENTAGE RESTRICTIONS: 35% OR LESS OF THE TOTAL SAND MAY BE GRAVEL 40%-90% OF THE TOTAL SAND IS TO BE COARSE AND VERY COARSE SAND.
GRAVEL QUALITY RESTRICTIONS: NO GRAVEL IS TO EXCEED 3/4" DIAMETER. NO GRAVEL IS SMALLER THAN 2MM/.787" IN DIAMETER. (IT MUST NOT PASS THROUGH A #10 SEIVE.)
COARSE AND QUALITY SAND RESTRICTIONS: NO COARSE SAND IS SMALLER THAN 0.5MM/.0196" IN DIAMETER. (IT MUST NOT PASS THROUGH A #35 SEIVE.)
FINES QUALITY RESTRICTIONS: NO MORE THAN 2% OF THE TOTAL SAND MAY PASS THROUGH A #200 SEIVE.
ASTM STANDARD: C-33 (CONCRETE SAND) MEETS THE ABOVE REQUIREMENTS.

SURROUNDING SAND

SURROUNDING SAND SHOULD BE EITHER SYSTEM SAND OF TITLE 5 FILL, 310 CMR 15.255 (3). ONLY SURROUNDING SAND MAY BE PLACED UNDER RAISED SYSTEMS OR WHERE TOP SOIL AND SOIL HORIZONS WITH ORGANIC MATTER HAVE BEEN REMOVED.

SYSTEM NOTES

SYSTEM TO BE INSTALLED IN ACCORDANCE WITH PRODUCT DESIGN AND INSTALLATION MANUAL, STATE AND LOCAL REGULATIONS. FOR PRODUCT INFORMATION OR THE NEAREST DEALER CONTACT PRESBY ENVIRONMENTAL, INC., 143 AIRPORT ROAD, WHITEFIELD, NEW HAMPSHIRE 03598 – PHONE 1-800-473-5298 – WWW.PRESBY ENVIRONMENTAL.COM
2) MINIMUM OF 6" OF MEDIUM TO COARSE SAND WITH LESS THAN 2% PASSING A # 200 SIEVE REQUIRED AROUND CIRCUMFERENCE OF ENVIRO-SEPTIC PIPES. (SEE ENVIRO-SEPTIC & SIMPLE-SEPTIC LEACHING SYSTEMS DESIGN AND INSTALLATION MANUAL FOR COMPLETE SAND AND FILL SPECIFICATIONS.)

DO NOT INSTALL SYSTEM ON FROZEN GROUND OR LEAVE SYSTEM UNCOVERED FOR EXTENDED PERIODS OF TIME.

NO VEHICLE TRAFFIC, SNOW REMOVAL, OR DEEP ROOTED VEGETATION IS PERMITTED OVER SYSTEM COMPONENTS UNLESS OTHERWISE SPECIFIED.

NO DRAINS, HOT TUBS, SAUNAS, GARBAGE DISPOSALS, WATER SOFTENERS, ETC., SHALL BE INCORPORATED INTO THIS SYSTEM UNLESS OTHERWISE SPECIFIED.

THE SYSTEM OWNER SHALL HAVE THE SYSTEM INSPECTED ANNUALLY BY AN OPERATOR TRAINED BY THE COMPANY AND SHALL SUBMIT THE RESULTS OF THAT INSPECTION, ON A TECHNOLOGY CHECKLIST, TO THE LOCAL APPROVING AUTHORITY AND THE MASSACHUSETTS DEPARTMENT OF ENVIRONMENTAL PROTECTION.

7) THE SYSTEM OWNER SHALL RECORD AT THE APPROPRIATE REGISTRY OF DEEDS, A NOTICE DISCLOSING THE EXISTENCE OF THE ALTERNATIVE SEPTIC SYSTEM ON THE PROPERTY AND D.E.P.'S APPROVAL OF THE SYSTEM. WHEN THE PROPERTY IS UNREGISTERED LAND THE NOTICE SHALL BE MARGINALLY REFERENCED ON THE OWNER'S DEED TO THE PROPERTY. WITHIN 30 DAYS OF RECORDING THE NOTICE, THE SYSTEM OWNER SHALL SUBMIT TO THE DEPARTMENT AND THE LOCAL APPROVING AUTHORITY (i) A CERTIFIED REGISTRY COPY OF THE NOTICE BEARING THE BOOK AND PAGE AND (ii) A REGISTRY COPY OF THE OWNER'S DEED TO THE PROPERTY, BEARING THE MARGINAL REFERENCE.

INSTALLER SHALL BE CERTIFIED BY PRESBY ENVIRONMENTAL INC.

PUMP CHAMBER DESIGN

2 – PUMP CHAMBERS PROPOSED (1650 GPD EACH)
PRESBY REQUIREMENTS
A. NO MORE THAN 1 GALLON PER LINEAL FOOT PRESBY PIPE – 1560 LF/2 FIELD = 780 GAL MAX DOSE
B. MINIMUM OF 6 CYCLES PER DAY
C. MIN 1 HOUR OF DOSING TIME BETWEEN CYCLES

USE 8 DOSES PER DAY 210 GALLON PER DOSE = PIPE VOLUME
275 LF *0.16 (44)= 320

GPM	VEL. (ft\sec)	H_L (ft\100ft)	H_L (ft)	H_L (total)
20	2.04	0.86	2.37	11.62
40	4.09	3.11	8.56	17.81
60	6.13	6.59	18.12	27.37
80	8.17	11.22	30.86	40.11

REFERENCE: CAMERON HYDRAULIC DATA, PG 3-38 & GOULDS PUMPS WASTEWATER & SEWAGE

PUMP DESIGN

STATIC HEAD = 9.25 FT PIPE
LENGTH = 275 FT PIPE
DIAMETER = 2 IN

PUMP SPECIFICATIONS:

TYPE: GOULD MODEL 3887(OR APPROVED EQUAL)
RATING: 50 G.P.M. @ 22 TDH
MOTOR: 1/2 HORSE POWER
VOLTAGE REQUIRED: 230 VOLTS, 4.9A

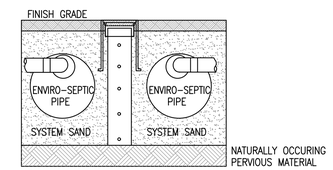

4"ø PERFORATED INSPECTION PORT TO BOTTOM OF SYSTEM SAND AND THREADED CAP WITHIN 3" OF FINAL GRADE.

WRAP PIPE WITH PERMEABLE GEOTEXTILE FABRIC TO ELIMINATE SAND INFILTRATION

INSPECTION PORT DETAIL

NOT TO SCALE

REQUIRED INSPECTIONS

1. AFTER EXCAVATION OF LEACHING AREA PRIOR TO INSTALLING SAND.
2. AFTER SYSTEM CONSTRUCTION PRIOR TO BACKFILLING.
3. AFTER FINAL GRADING IS COMPLETED.

(ADDITIONAL INSPECTIONS MAY BE REQUIRED BY THE BOARD OF HEALTH)

REVISIONS	
APRIL 24, 2023	BOARD OF HEALTH PEER REVIEW
MAY 10, 2023	PLANNING BOARD PEER REVIEW

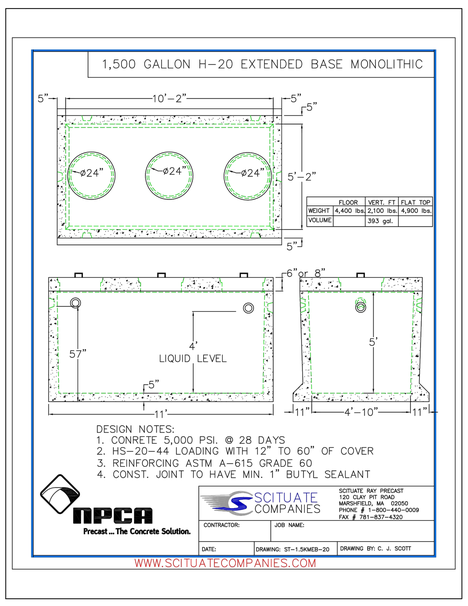

SEPTIC TANK DETAIL

NOT TO SCALE

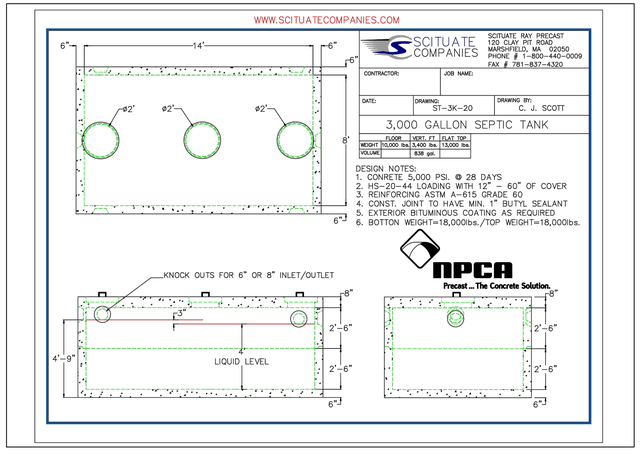

PUMP CHAMBER DETAIL

NOT TO SCALE

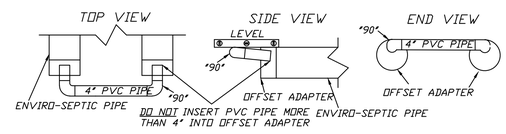

THE BACKFILL SHALL CONTAIN NO MORE THAN 10% FINES PASSING THROUGH THE #200 SIEVE. (CONTRACTOR SHALL PROVIDE PURCHASE RECEIPTS TO GRADY CONSULTING)

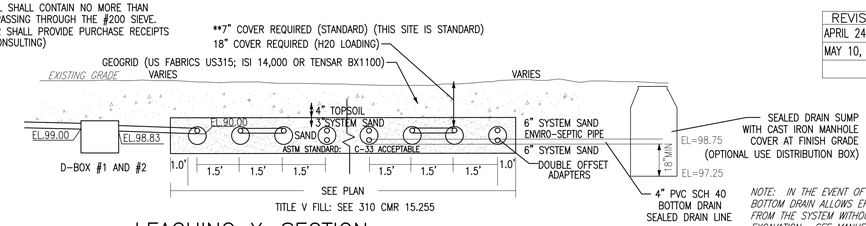

NOTE: IN THE EVENT OF SYSTEM FAILURE, THE BOTTOM DRAIN ALLOWS EFFLUENT TO BE PUMPED FROM THE SYSTEM WITHOUT REQUIRING EXCAVATION. SEE MANUFACTURERS SPECIFICATIONS FOR SYSTEM REJUVENATION.

LEACHING X-SECTION

NOT TO SCALE

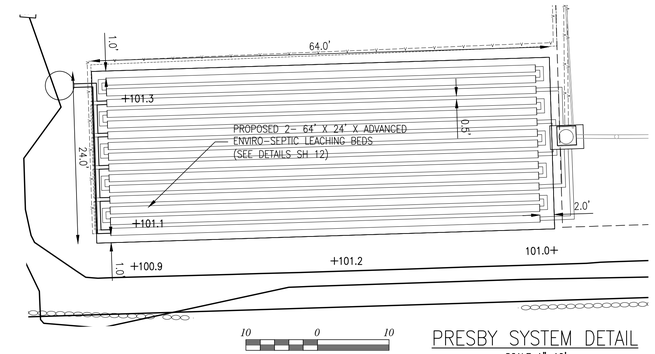

PRESBY SYSTEM DETAIL

SCALE 1"=10'

COMMONWEALTH OF MASSACHUSETTS
KEVIN S. GRADY
CIVIL
No. 46264
REGISTERED PROFESSIONAL ENGINEER

SITE PLAN

ASSESSORS MAP F9 LOT 11 & 12C
#0 &74 CONGRESS STREET
PEMBROKE, MASSACHUSETTS

PREPARED FOR:
WHATBARN, LLC
29 DUCK HILL ROAD
DUXBURY MA 02332

MARCH 13, 2023
SCALE: AS NOTED
JOB No. 22-286

SEPTIC

GRADY CONSULTING, L.L.C.
Civil Engineers, Land Surveyors & Landscape Architects
71 Evergreen Street, Suite 1, Kingston, MA 02364
Phone (781) 585-2300

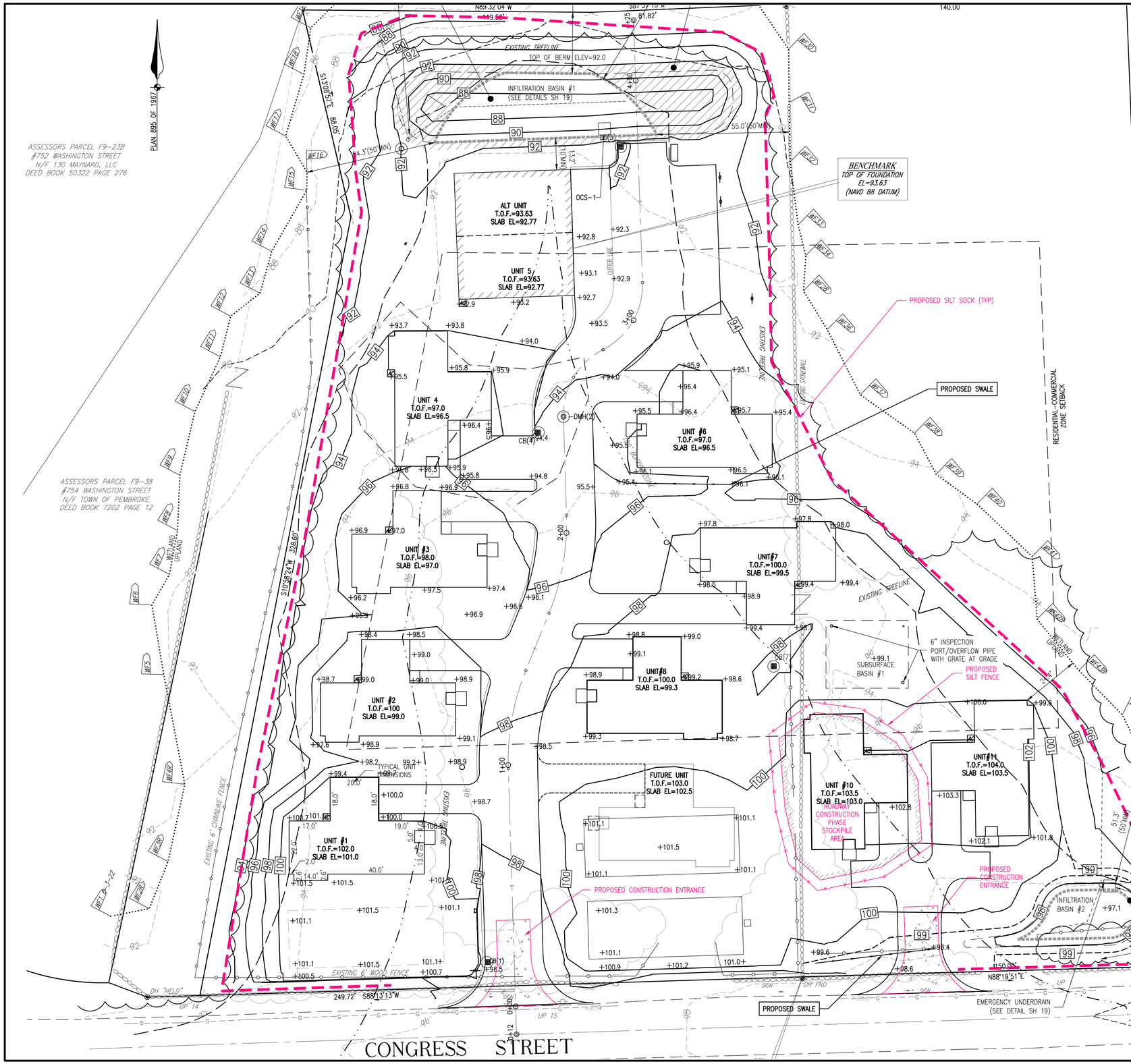

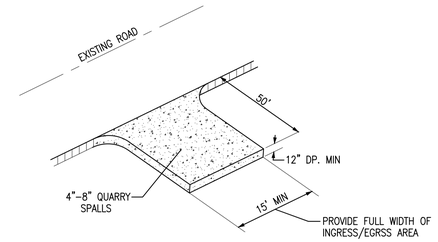

CRUSHED STONE CONSTRUCTION ENTRANCE

(NOT TO SCALE)

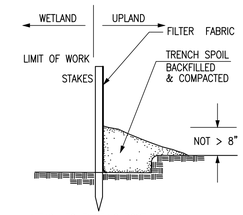

SILT FENCE

(NOT TO SCALE)

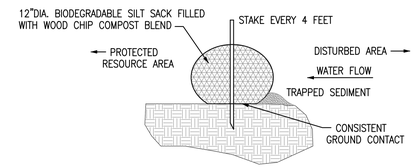

SILT SOCK DETAIL

NOT TO SCALE

EROSION CONTROL:

1. 12"ø SILT SACK OR APPROVED EQUAL TO BE INSTALLED AS SHOWN ON PLAN.
2. DE-WATERING TO BE PUMPED TO DIRT BAG, LOCATIONS AS SHOWN ON PLAN.
3. ALL DISTURBED AREAS, CUT AND FILL AREAS, ARE TO BE BROUGHT TO FINISHED GRADE AND PLANTED PER LANDSCAPE PLAN BY ECCOTERRA DESIGN GROUP LLC.
4. CRUSHED STONE ENTRANCE TO BE MAINTAINED UNTIL PAVEMENT BASE COURSE HAS BEEN INSTALLED
5. HAY MULCH, OR OTHER SUITABLE EROSION PROTECTION, SHALL BE UTILIZED ON ALL EXPOSED SLOPES
6. CONSTRUCTION SITE TO BE SPRINKLED TO CONTROL DUST DURING TIMES OF EXCESSIVE CONSTRUCTION DUST.

20 0 20 40 60

Scale 1" = 20'

REVISIONS	
APRIL 24, 2023	BOARD OF HEALTH PEER REVIEW
MAY 10, 2023	PLANNING BOARD PEER REVIEW

COMMONWEALTH OF MASSACHUSETTS
KEVIN S. GRADY
CIVIL
No. 46264
REGISTERED PROFESSIONAL ENGINEER

SITE PLAN

ASSESSORS MAP F9 LOT 11 & 12C
#0 &74 CONGRESS STREET
PEMBROKE, MASSACHUSETTS

PREPARED FOR:
WHATBARN, LLC
29 DUCK HILL ROAD
DUXBURY MA 02332

MARCH 13, 2023
SCALE: AS NOTED
JOB No. 22-286

GRADY CONSULTING, L.L.C.
Civil Engineers, Land Surveyors & Landscape Architects
71 Evergreen Street, Suite 1, Kingston, MA 02364
Phone (781) 585-2300

EROSION CONTROL

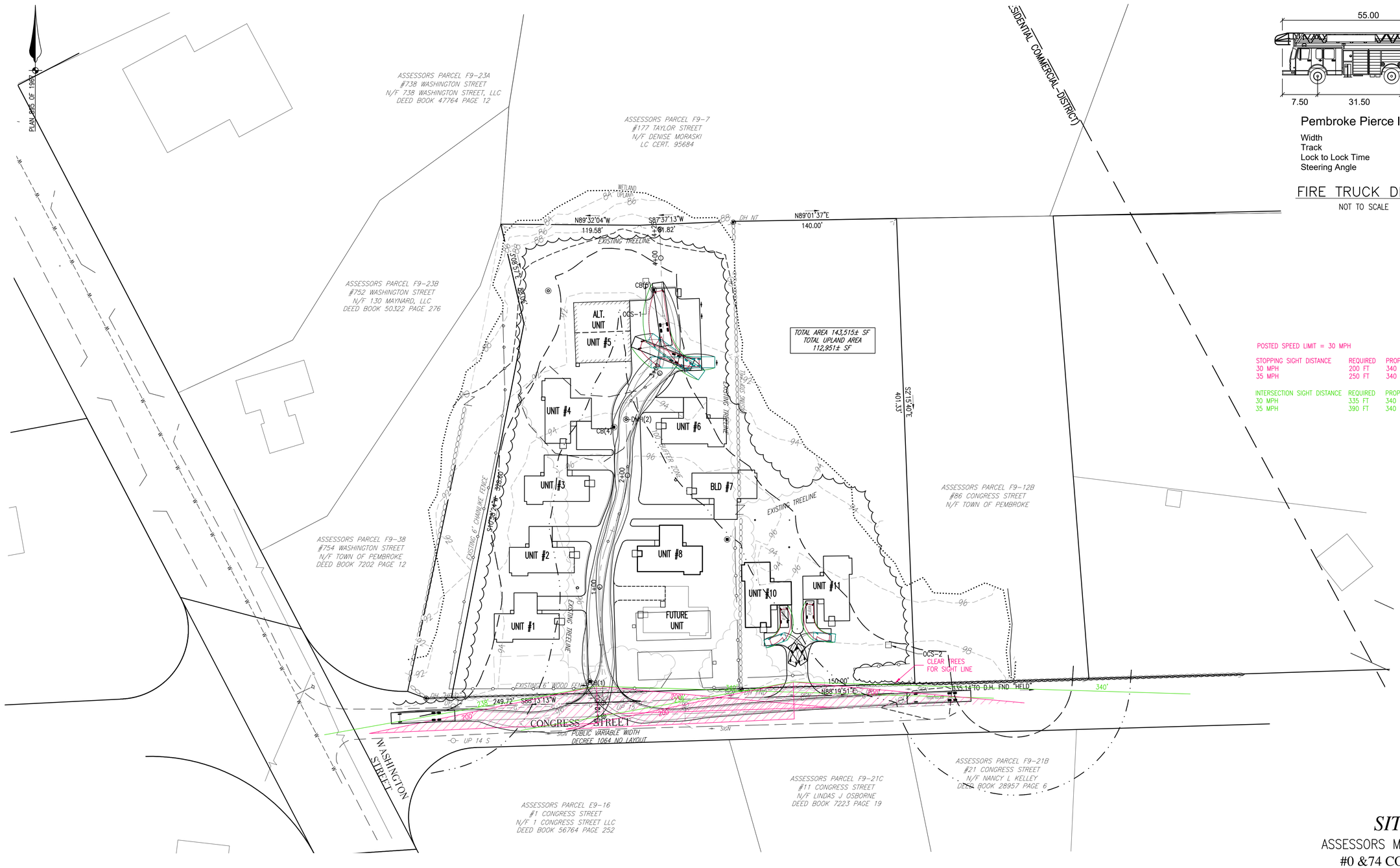

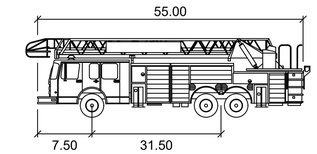

Pembroke Pierce ladder

Width	: 9.50
Track	: 7.50
Lock to Lock Time	: 6.0
Steering Angle	: 37.0

FIRE TRUCK DETAIL

NOT TO SCALE

POSTED SPEED LIMIT = 30 MPH

STOPPING SIGHT DISTANCE	REQUIRED	PROP. MAIN DRIVE	PROP DRIVE 2
30 MPH	200 FT	340 FT +	340 FT +
35 MPH	250 FT	340 FT +	340 FT +

INTERSECTION SIGHT DISTANCE	REQUIRED	PROP. MAIN DRIVE	PROP DRIVE 2
30 MPH	335 FT	340 FT +	340 FT +
35 MPH	390 FT	340 FT +	340 FT +

40 0 40 80 120

Scale 1" = 40'

REVISIONS	
APRIL 24, 2023	BOARD OF HEALTH PEER REVIEW
MAY 10, 2023	PLANNING BOARD PEER REVIEW

SITE PLAN

ASSESSORS MAP F9 LOT 11 & 12C

#0 &74 CONGRESS STREET

PEMBROKE, MASSACHUSETTS

PREPARED FOR:
WHATBARN, LLC
29 DUCK HILL ROAD
DUXBURY MA 02332

MARCH 13, 2023
SCALE: AS NOTED
JOB No. 22-286

GRADY CONSULTING, L.L.C.
Civil Engineers, Land Surveyors & Landscape Architects
71 Evergreen Street, Suite 1, Kingston, MA 02364
Phone (781) 585-2300

SAFETY

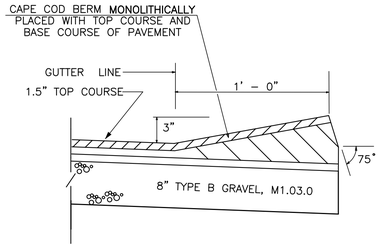

CAPE COD BERM DETAIL

(NOT TO SCALE)

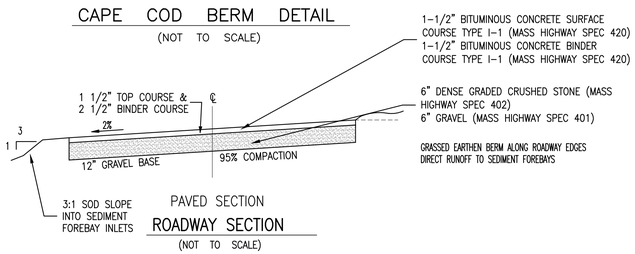

PAVED SECTION

ROADWAY SECTION

(NOT TO SCALE)

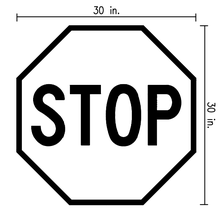

STOP SIGN SHALL CONFORM TO THE MANUAL ON UNIFORM TRAFFIC CONTROL DEVICES WITH THE EXCEPTION OF BEING DIAMOND GRADE.

12" WIDE x 12 FT LONG STOP LINE TO BE PLACED 4 FT IN ADVANCE OF NEAREST CROSSWALK.

STOP SIGN DETAIL

(NOT TO SCALE)

CONSTRUCTION SEQUENCE:

STAKE LIMIT OF WORK CLEARING
INSTALL SILT SOCK EROSION CONTROL BARRIER
CLEAR AND GRUB SITE AREAS
INSTALL CONSTRUCTION APRON & DRIVEWAY BASE
STAKE DRAINAGE BASIN LOCATION
BRING CUT AREAS TO SUBGRADE
INSTALL SILT FENCE FOR STOCKPILE AREA
INSTALL FOUNDATION & BEGIN FRAMING
INSTALL TEMPORARY DRAINAGE AREAS WHERE NECESSARY
INSTALL ELECTRIC, GAS & WATER UTILITIES
PLACE FILL MATERIAL TO BASE COURSE
CONSTRUCT DRAINAGE BASINS
COMPLETE FINISH GRADING
INSTALL ENERGY DISSIPATERS AND CONNECT ALL OUTLETS
COMPLETE BUILDING CONSTRUCTION
INSTALL\RAISE MANHOLE STRUCTURES TO FINISH GRADE DRAIN, SEWER,
LOAM & SEED DISTURBED AREAS, MULCH AND PLANT RAIN GARDEN & LANDSCAPE AREAS
INSTALL FINISH PAVEMENT COAT
SCHEDULE FINAL SITE INSPECTION FOR CERTIFICATION
REMOVE SEDIMENT CONTROLS

CONSTRUCTION NOTES

GENERAL:

1. THE ACCURACY OF EXISTING UTILITY LOCATIONS, DIMENSIONS AND LINES IS FROM EXISTING INFORMATION OF RECORD AND IS NOT WARRANTED. CONTRACTOR TO VERIFY PRIOR TO INITIATING CONSTRUCTION.
2. PRIOR TO CONSTRUCTION, THE CONTRACTOR SHALL SECURE ALL NECESSARY STATE, MUNICIPAL AND OTHER UTILITY PERMITS AND VERIFY THE PROPOSED LOCATIONS OF UTILITIES WITH UTILITY COMPANIES.
3. CONTRACTOR SHALL NOTIFY "DIG SAFE" (1–800–322–4844) AT LEAST 4 DAYS PRIOR TO CONSTRUCTION.
4. UNDERGROUND UTILITIES SHALL BE INSTALLED IN ACCORDANCE WITH THE SPECIFICATIONS OF THE APPROPRIATE DEPARTMENT OR COMPANY.
5. ALL CONSTRUCTION SHALL CONFORM TO TOWN OF PEMBROKE PLANNING BOARD RULES AND REGULATIONS, DPW SPECIFICATIONS, CONSERVATION COMMISSION REGULATIONS AND ALL OTHER APPLICABLE CODES.
6. ALL STUMPS SHALL BE DISPOSED OFF SITE.
7. CLEANUP – UPON COMPLETION OF ALL WORK ON THE GROUND, THE DEVELOPER SHALL REMOVE FROM THE STREETS AND ADJOINING PROPERTY, ALL TEMPORARY STRUCTURES AND ALL SURPLUS MATERIAL AND RUBBISH WHICH MAY HAVE ACCUMULATED DURING CONSTRUCTION, AND SHALL LEAVE THE WORK IN A NEAT AND ORDERLY CONDITION. DURING CONSTRUCTION, THE DEVELOPER SHALL KEEP THE SITE FREE OF RUBBISH WHICH MAY BE CARRIED BY WIND OR RAIN OFF THE SITE TO ABUTTING PROPERTIES OR ONTO PUBLIC WAYS.

DRAINAGE SYSTEM NOTES:

1. CONTACT THE DESIGN ENGINEER FOR APPROVAL OF ANY CONSTRUCTION PHASE CHANGES.
2. CONTRACTOR TO AVOID SOILS COMPACTION WITHIN DRAINAGE SYSTEM AREA. CONTRACTOR SHOULD AVOID MACHINERY OR VEHICLE USE OVER STORM WATER SYSTEMS.

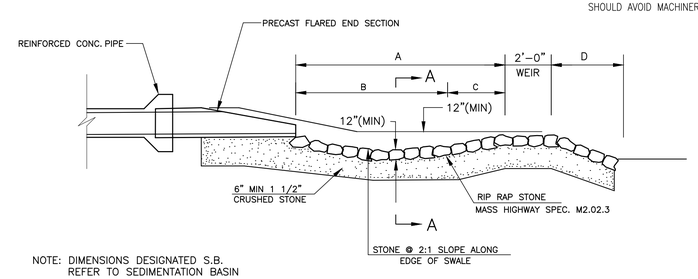

NOTE: DIMENSIONS DESIGNATED S.B. REFER TO SEDIMENTATION BASIN

DIMENSIONS DESIGNATED D.B. REFER TO DETENTION BASIN

SECTION B–B

Table 1
Minimum Cover Requirements for ADS N-12®, N-12 ST, and N-12 WT (per AASHTO) with AASHTO H-25 or HS-25 Load

Inside Diameter, ID, in.(mm)	Minimum Cover ft. (m)	Inside Diameter, ID, in.(mm)	Minimum Cover ft. (m)
4 (100)	1 (0.3)	24 (600)	1 (0.3)
6 (150)	1 (0.3)	30 (750)	1 (0.3)
8 (200)	1 (0.3)	36 (900)	1 (0.3)
10 (250)	1 (0.3)	42 (1050)	1 (0.3)
12 (300)	1 (0.3)	48 (1200)	1 (0.3)
15 (375)	1 (0.3)	54 (1350)	2 (0.6)
18 (450)	1 (0.3)	60 (1500)	2 (0.6)

Note: Minimum covers presented here were calculated assuming Class III backfill material compacted to 90% standard Proctor density around the pipe and a minimum of 6-inches (0.15m) structural backfill over the pipe crown, as recommended in Section 5 of the Drainage Handbook, with an additional layer of compacted traffic lane sub-base for a total cover as required. In shallow traffic installations, especially where pavement is involved, a good quality compacted material to grade is required to prevent surface settlement and rutting.

ADS

Maximum Cover

Wall thrust generally governs the maximum cover a pipe can withstand and conservative maximum cover heights will result when using the information presented in the *Structures* section (Section 2) of the Drainage Handbook.

The maximum burial depth is highly influenced by the type of backfill and level of compaction around the pipe. General maximum cover limits for ADS N-12, N-12 ST, N-12 WT pipe, (ASTM F2306 and AASTHO M252/M294 Type S pipes) are shown in Table 3 for a variety of backfill conditions.

Table 3 was developed assuming pipe is installed in accordance with ASTM D2321 and the *Installation* section (Section 5) of the Drainage Handbook. Additionally, the calculations assume zero hydrostatic load, incorporate the maximum safety factors represented in Structures section of the Drainage Handbook, use material properties consistent with the expected performance characteristics for N-12 (per ASTM F2306) materials as shown in Table 2 below, and assume the native soil is of adequate strength and is suitable for installation. For applications requiring fill heights greater than those shown in Table 3 or where hydrostatic pressure due to groundwater is present, contact an ADS engineering representative.

Figure 1
ADS N-12®, N-12 ST, and N-12 WT (per AASHTO) Trench Detail Under Pavement

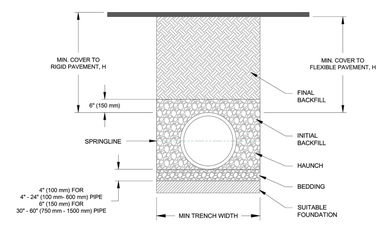

Table 2
ADS N-12 (per AASHTO) Mechanical Properties

Cell Class	Factored Compressive Strain (%)	Tension Strain (%)	Initial		75-Year	
			Fu (psi)	E (psi)	Fu (psi)	E (psi)
ASTM D3350 435400C	4.1	5.0	3,000	110,000	900	21,000

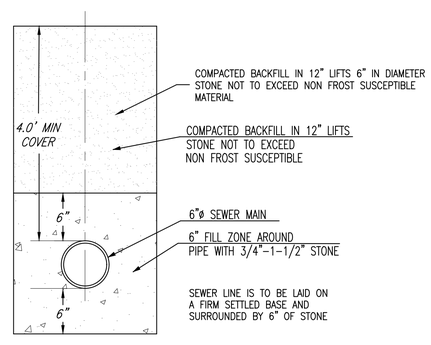

TYPICAL SEWER TRENCH DETAIL

(NOT TO SCALE)

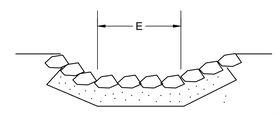

SECTION A–A

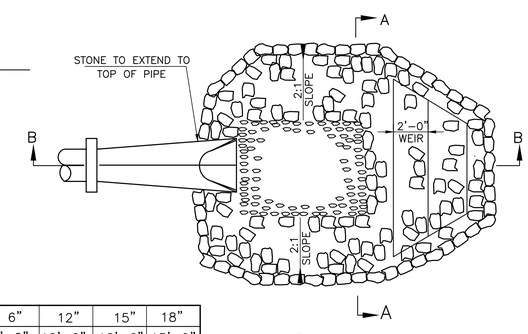

PLAN

PIPE DIA.	6"	12"	15"	18"
A	6'–0"	10'–0"	12'–6"	15'–0"
B	4'–6"	7'–6"	9'–6"	11'–3"
C	1'–6"	2'–6"	3'–0"	3'–9"
D	2'–0"	3'–0"	4'–0"	4'–6"
E	2'–0"	4'–0"	5'–0"	6'–0"

NOTES:
1. STONE FOR EROSION CONTROL PADS SHALL COMPLY WITH MDPW MATERIAL SPEC M 2.02.3
2. STONE BERM FOR SILT TRAP SHALL BE CONSTRUCTED AROUND SIDES OF EROSION CONTROL PADS

DETAIL – SILT TRAP, EROSION CONTROL PAD

(NOT TO SCALE)

REVISIONS	
APRIL 24, 2023	BOARD OF HEALTH PEER REVIEW
MAY 10, 2023	PLANNING BOARD PEER REVIEW

SEWER CONNECTION NOTES:

1. THE CONNECTION AT THE EXISTING SEWER LINE IS TO BE AS DIRECTED BY THE BOARD OF HEALTH
2. CONSTRUCTION MATERIALS AND METHODS SHALL CONFORM TO TOWN OF PEMBROKE AND STATE OF MASSACHUSETTS STANDARDS AND REQUIREMENTS.
3. DE–WATERING OF TRENCH, IF REQUIRED, SHOULD BE CONDUCTED IN CONFORMITY WITH LOCAL REGULATIONS.
4. PRIOR TO ANY CONSTRUCTION, A STREET OPENING PERMIT AND A SEWER CONSTRUCTION PERMIT MUST BE OBTAINED BY THE CONTRACTOR FROM THE TOWN OF PEMBROKE D.P.W. (UNLESS SEWER CONNECTION IS NOT IN R.O.W.)
5. SEWER MAINS TO BE PVC SCH 40 OR AS OTHERWISE NOTED.
6. CONTRACTOR SHALL NOTIFY THE TOWN OF PEMBROKE BOARD OF HEALTH OF TIMING OF CONSTRUCTION
7. SURPLUS EXCAVATION MATERIAL TO BE HAULED OFF AND LEGALLY DISPOSED OF BY CONTRACTOR.
8. THE CONTRACTOR MUST INSTALL DETECTABLE "GREEN" MARKING TAPE, APPROXIMATELY ONE (1) FOOT ABOVE THE PROPOSED SEWER MAIN FOR ITS ENTIRE LENGTH.
9. THERE SHALL BE NO FIELD CHANGES TO THIS PLAN WITHOUT PRIOR NOTIFICATION OF BOTH THE DESIGN ENGINEER AND THE TOWN OF PEMBROKE SEWER DIVISION.
10. THE CONTRACTOR SHALL NOTIFY THE ENGINEER PRIOR TO BACKFILLING SO THAT AN "AS–BUILT" PLAN MAY BE COMPILED AND SUBMITTED TO THE PEMBROKE BOARD OF HEALTH.
11. ALL INTERIOR PLUMBING CHANGES SHALL BE MADE BY A LICENSED PLUMBER AND IN FULL COMPLIANCE WITH ALL STATE AND LOCAL PLUMBING CODE REQUIREMENTS.
12. CONTRACTOR IS TO RESTORE TO ORIGINAL CONDITION ANY UTILITIES OR IMPROVEMENTS DAMAGED DURING CONSTRUCTION INCLUDING LOAMING AND SEEDING OF LAWNS.
13. CONTRACTOR TO VERIFY EXISTING SEWER ELEVATIONS.

SITE PLAN

ASSESSORS MAP F9 LOT 11 & 12C
#0 &74 CONGRESS STREET
PEMBROKE, MASSACHUSETTS

PREPARED FOR:
WHATBARN, LLC
29 DUCK HILL ROAD
DUXBURY MA 02332

MARCH 13, 2023
SCALE: AS NOTED
JOB No. 22–286

GRADY CONSULTING, L.L.C.
Civil Engineers, Land Surveyors & Landscape Architects
71 Evergreen Street, Suite 1, Kingston, MA 02364
Phone (781) 585–2300

DETAILS – SITE

WATER SUPPLY NOTES

1. THERE SHALL BE NO PHYSICAL CONNECTION BETWEEN A PUBLIC OR PRIVATE POTABLE WATER SUPPLY SYSTEM AND A SEWER, OR APPURTENANCE THERETO WHICH WOULD PERMIT THE PASSAGE OF ANY WASTEWATER OR POLLUTED WATER INTO THE POTABLE SUPPLY.
2. THE SEWER MAY BE LAID CLOSER THAN 10 FEET TO A WATER MAIN PROVIDED THAT IT IS
   A. LAID IN A SEPARATE TRENCH, AND
   B. THE ELEVATION OF THE TOP(CROWN) OF THE SEWER IS AT LEAST 18 INCHES BELOW THE BOTTOM(INVERT) OF THE WATER MAIN.
3. WHENEVER SEWERS MUST CROSS UNDER WATER MAINS, THE SEWER SHALL BE LAID AT SUCH AN ELEVATION THAT THE TOP OF THE SEWER IS AT LEAST 18 INCHES BELOW THE BOTTOM OF THE WATER MAIN. WHEN THE ELEVATION OF THE SEWER CANNOT BE VARIED TO MEET THIS REQUIREMENT, THE WATER MAIN SHALL BE RELOCATED TO PROVIDE THIS SEPARATION OR RECONSTRUCTED WITH MECHANICAL JOINT PIPE FOR A DISTANCE OF 10 FEET ON EACH SIDE OF THE SEWER. ONE FULL LENGTH OF WATER MAIN SHOULD BE CENTERED OVER THE SEWER SO THAT BOTH JOINTS WILL BE AS FAR FROM THE SEWER AS POSSIBLE.
4. WHEN IT IS IMPOSSIBLE TO OBTAIN PROPER HORIZONTAL AND VERTICAL SEPARATION AS STIPULATED ABOVE, BOTH THE WATER MAIN AND SEWER SHALL BE CONSTRUCTED OF MECHANICAL JOINT CAST IRON PIPE AND SHALL BE PRESSURE TESTED TO ASSURE WATERTIGHTNESS.

SPECIFICATIONS

1. ALL WATER MAIN PIPE SHALL BE MANUFACTURED IN ACCORDANCE WITH A WW A C 151. PIPE SHALL BE DUCTILE IRON, THICKNESS CLASS 52. THE INSIDE OF THE PIPE SHALL BE GIVEN A CEMENT LINING AND ASPHALTIC SEAL COAT IN ACCORDANCE WITH A WW A C 104.
2. ALL INSTALLED WATER PIPE SHALL HAVE FIVE FEET OF COVER MEASURED AT FINAL GRADE.
3. GENERALLY, NO PIPE SMALLER THAN EIGHT INCHES IN INTERNAL DIAMETER SHALL BE UTILIZED FOR WATER MAINS CONNECTED TO A HYDRANT.
4. ALL FITTINGS SHALL BE MECHANICAL JOINT, CONFORM TO THE REQUIREMENTS OF A WW A CL 10 OR C153, AND BE CAPABLE OF WITHSTANDING 250 PSI. "MEG-A-LUG" SERIEES 100 OR APPROVED EQUAL.
5. TAPPING SLEEVES SHALL HAVE STAINLESS STEEL WRAP TEES.
6. ALL VALVES AND FITTINGS SHALL BE BRACED AGAINST MOVEMENT UTILIZING APPROVED JOINT RESTRAINT SYSTEMS (I.E. MEGALUG® FITTINGS SERIES 1100 OR APPROVED EQUAL).
7. WATER VALVES SHALL BE RESILIENT WEDGE TYPE GATE VALVES MANUFACTURED TO AWWA C509 STANDARDS. VALVES SHALL OPEN RIGHT (CLOCKWISE). ALL VALVES THAT ARE 16 INCHES IN SIZE OR GREATER, SHALL BE BUTTERFLY VALVES. BUTTERFLY VALVES SHALL BE IN ACCORDANCE WITH "RUBBER SEATED BUTTERFLY VALVES", AWWA DESIGNATION C504. ALL GATE VALVES AND BUTTERFLY VALVES SHALL BE MANUFACTURED BY MUELLER CO.
8. GATE BOXES SHALL BE SET PLUMB AND FLUSH WITH THE GROUND SURFACE AND CONFORM TO A WWA C500. GATE VALVE BOXES SHALL BE EQUIPPED WITH PAVEMENT FLANGE.
9. NO PIPE OR FITTING SHALL BE BACKFILLED BEFORE INSPECTION BY A PERSON DESIGNATED BY THE WATER DEPARTMENT.
10. HYDRANTS SHALL CONFORM TO THE REQUIREMENTS OF AWWA C502. HYDRANTS SHALL BE SET PLUMB, WITH THE STEAMER NOZZLE FACING THE ROAD. THE AREA AROUND THE DRIPS SHALL BE FILLED WITH CLEAN STONE. APPROVED JOINT RESTRAINT FITTINGS SHALL BE UTILIZED FOR HYDRANT INSTALLATION. HYDRANTS SHALL BE PLACED SO THAT THEY ARE WITHIN ONE FOOT OF THE PROPERTY LINE AND SHALL BE THE 5 ¼ CENTURION MODEL AS MANUFACTURED BY MUELLER COMPANY.
11. THE COMPLETED WATER MAIN SHALL BE CHLORINATED BY USING ONE PART SOLUTION OF AVAILABLE CHLORINE IN SUCH VOLUME THAT THE RATE OF DOSAGE OF THE WATER CONTENT OF THE MAIN SHALL BE AT LEAST FIFTY PARTS PER MILLION AVAILABLE CHLORINE. THE CONTACT PERIOD SHALL BE AT LEAST TWENTY-FOUR HOURS, LONGER IF THE TEST FOR RESIDUAL CHLORINE INDICATES THAT IT IS NECESSARY FOR PROPER DISINFECTION. WATER MAIN DISINFECTION SHALL BE IN ACCORDANCE WITH AN APPROVED A WW A METHOD FOR DISINFECTING WATER MAINS. THE DEPARTMENT WILL TAKE BACTERIA SAMPLES AND PERFORM ANALYSIS. THE CUSTOMER SHALL BE RESPONSIBLE FOR FLUSHING AND PRESSURE TESTING NEW WATER MAIN. NO WATER MAIN SHALL BE PLACED INTO SERVICE UNTIL THE DEPARTMENT HAS GIVEN APPROVAL.
12. ALL DAMAGES OF WHATEVER NATURE RESULTING FROM THE WORK OR RESULTING TO THE WORK, FROM WHATEVER CAUSE SHALL BE BORNE AND SUSTAINED BY THE CONTRACTOR.
13. DAMAGE TO ANY EXISTING UNDERGROUND STRUCTURE SHALL BE REPAIRED AT THE CONTRACTOR'S EXPENSE.
14. PRESSURE TESTS OF THE NEW WATER MAIN SHALL BE CARRIED OUT AT 150 POUNDS GAUGE FOR ONE HOUR. LEAKAGE TESTS SHALL BE PERFORMED IF THE PRESSURE DROPS AFTER THE ONE HOUR TIME PERIOD. THE RATE OF LEAKAGE SHALL NOT EXCEED ONE GALLON PER DAY PER LINEAR FOOT OF JOINT.
15. THE CONTRACTOR SHALL GUARANTEE ALL MATERIALS AND WORKMANSHIP FOR A PERIOD OF ONE YEAR AFTER THE COMPLETION OF STRENGTH AND LEAKAGE TESTS.
16. IN THE CASE WHERE THE TOWN OF PEMBROKE SUPPLIES WATER TO INDIVIDUAL HOUSES IN A DEVELOPMENT AND AFTER ALL THE FOREGOING CONDITIONS HAVE BEEN MET, AND BEFORE THE TOWN ACCEPTS THE ROAD OR ROADS AND/OR UTILITIES, THE OWNER OF THE DEVELOPMENT SHALL PAY, AT COST, FOR- ANY REPAIRS TO THE MAINS AND APPURTENANCES WHICH MAY BECOME NECESSARY.
17. THE WATER MAIN SHOULD HAVE A MINIMUM OF 18" OF CLEARANCE BETWEEN ANY UTILITIES WHETHER RUNNING PARALLEL OR CROSSING A UTILITY.
18. THE WATER MAIN, FITTINGS AND HYDRANTS LATERALS SHALL BE POLYETHYLENE ENCASED WITH V-BIO IN ANY INSTANCE THE WATER SYSTEM APPURTENANCES MAY BE INSTALLED WITHIN THE SEASONAL HIGH GROUND WATER.

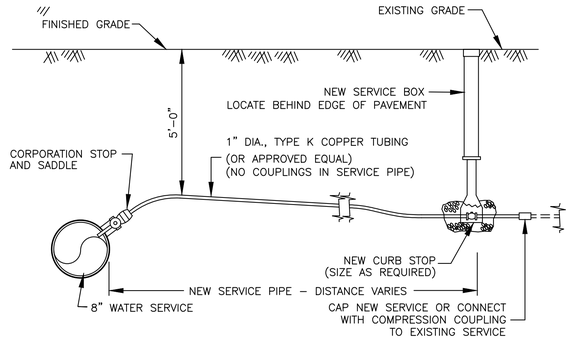

1. SERVICES SHALL CONSIST OF COPPER TUBING, A CORPORATION COCK AT THE MAIN, A CURB STOP AND CURB BOX AT THE PROPERTY LINE AND AN INSIDE VALVE AND METER ON THE OWNERS PREMISES.
2. ALL SERVICE PIPE SHALL BE OF TYPE "K" COPPER TUBING, THE SIZE TO BE DETERMINED BY THE DEPARTMENT.
3. SERVICE PIPE SHALL BE PLACED FIVE FEET BELOW FINAL GRADE.
4. SERVICE BOXES SHALL BE CENTERED OVER THE CURB STOP AND SET FLUSH WITH THE GROUND SURFACE.
5. CONNECTIONS TO WATER MAINS SHALL BE DONE BY THE DEPARTMENT. A SERVICE CHARGE WILL BE LEVIED FOR THIS SERVICE.
6. NO PIPE OR FITTING SHALL BE BACKFILLED BEFORE INSPECTION BY A PERSON DESIGNATED BY THE DEPARTMENT.
7. ALL DAMAGE OF WHATEVER NATURE RESULTING FROM THE WORK, OR RESULTING TO THE WORK FROM WHATEVER CAUSE SHALL BE BORNE AND SUSTAINED BY THE CONTRACTOR.
8. DAMAGES TO ANY EXISTING UNDERGROUND STRUCTURE SHALL BE REPAIRED AT THE CONTRACTOR'S EXPENSE.
9. NO WATER SERVICE SHALL BE INSTALLED NEARER THAN 10 FEET TO ANY SEPTIC TANK, CESSPOOL, LEACHING FIELD DRAINAGE PIT, SEWER LINE OR DRAIN LINE AS PER DEP 310 CMR, SECTION 15.211.
10. THE CONTRACTOR WILL HAVE AN APPROVED STREET OPENING PERMIT FROM THE PEMBROKE DEPARTMENT OF PUBLIC WORKS (THE DEPARTMENT) PRIOR TO THE START OF ANY WORK PERFORMED IN A PUBLIC WAY.
11. A SERVICE LINE INSTALLED BY A PRIVATE CONTRACTOR IN A PUBLIC WAY MUST BE GUARANTEED FOR ONE YEAR FROM THE DATE OF COMPLETION. THE CONTRACTOR SHALL REPAIR ANY SETTLEMENT OF THE TRENCH PAVEMENT BY A METHOD APPROVED BY THE DEPARTMENT AND AT HIS OWN EXPENSE FOR THE SAME ONE-YEAR PERIOD STARTING FROM THE DATE OF COMPLETION.

1"ø DOMESTIC WATER SERVICE DETAIL

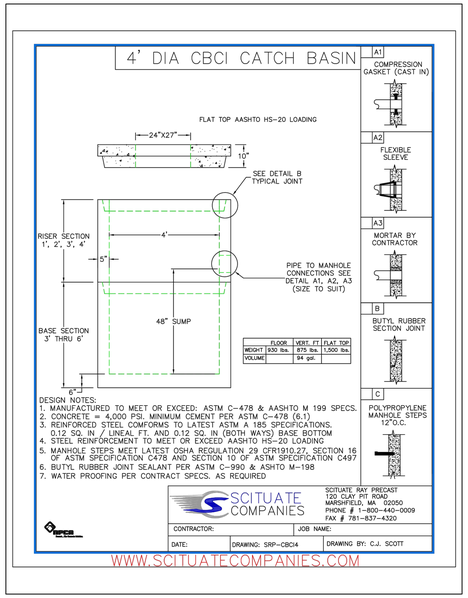

SHALLOW CATCH BASIN DETAIL

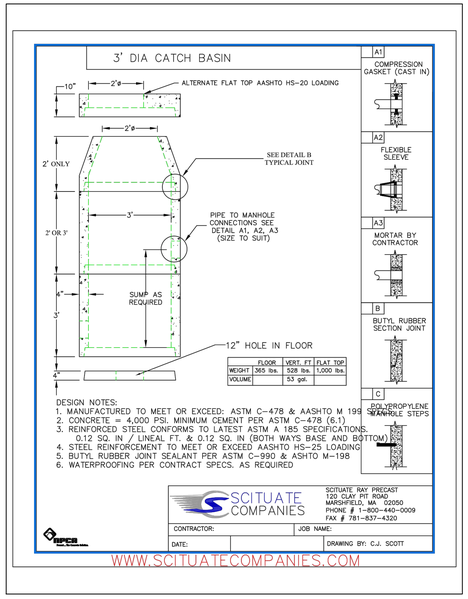

MANHOLE FOR ROOF DRAIN SYSTEM

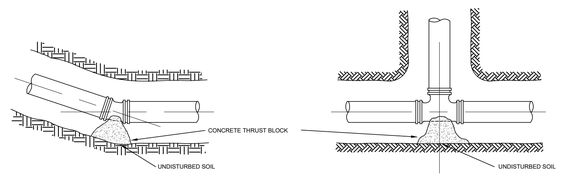

PLAN HORIZONTAL BEND

PLAN TEE

NOTE: COVER MECHANICAL JOINTS WITH 3 MIL POLYETHYLENE TO PROTECT BOLTS FROM CONCRETE THRUST BLOCK

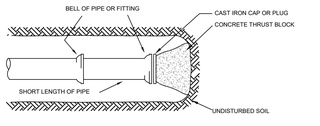

PLAN PLUG END OF LINE

THRUST BLOCK REQUIREMENTS	
FITTING	MIN BEARING AREA (SF)
8"X 1/8 BEND	12
12"X 8" TEE	12
10"X 8" TEE	10
8"X 8" TEE	9
8"X 6" TEE	5
8" CAP / PLUG	12
12"X 8" REDUCER	8
10"X 8" REDUCER	6
8" X 6" REDUCER	4
8" 22 1/2"" & 45° BENDS	8
ALL TEES AND VALVES	10
HYDRANTS	9

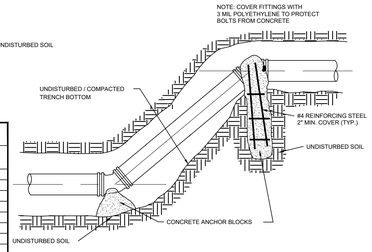

ELEVATION - VERTICAL BENDS

ANCHORAGE DETAILS

(NOT TO SCALE)

DTHRUST

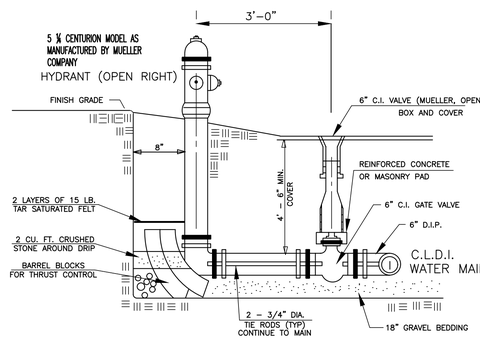

HYDRANT DETAIL

(NOT TO SCALE)

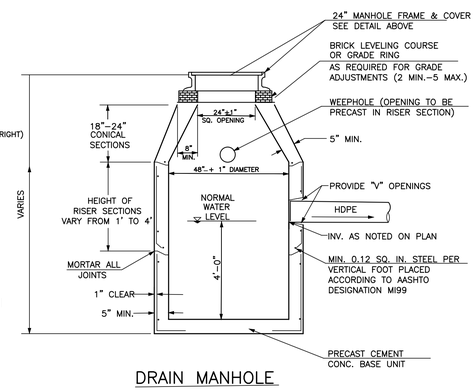

DRAIN MANHOLE

(NOT TO SCALE)

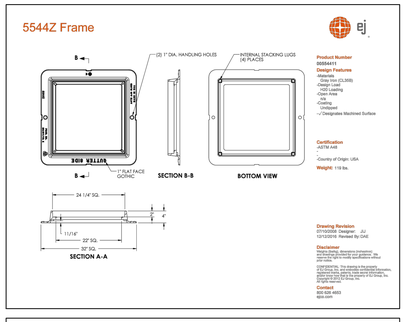

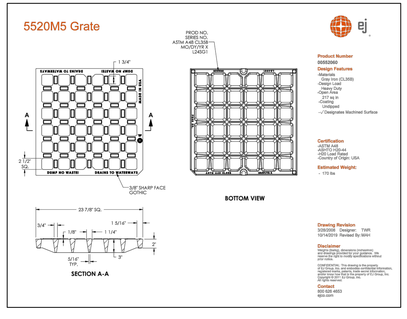

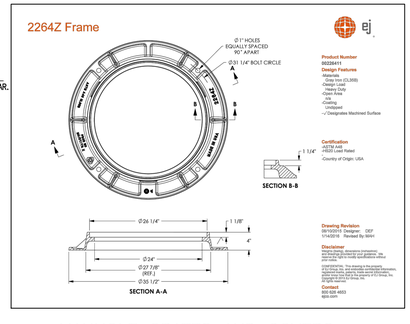

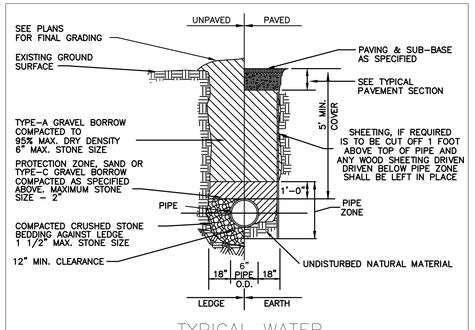

TYPICAL WATER TRENCH DETAIL

NOT TO SCALE

1. GRAVEL BORROW SHALL CONFORM TO MASS HIGHWAY SPECIFICATION M1.03.0
2. CRUSHED STONE BEDDING SHALL CONFORM TO MASS HIGHWAY SPECIFICATION M2.01.1

DWTRCH

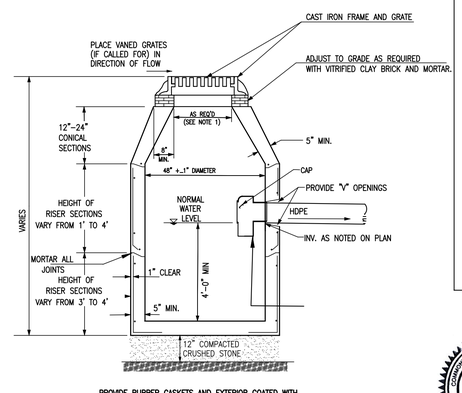

PROVIDE RUBBER GASKETS AND EXTERIOR COATED WITH BITUMINOUS SEAL PER PLANNING BOARD RULES AND REGULATIONS

PRECAST GASOLINE TRAP CATCH BASIN

(NOT TO SCALE)

MANHOLE GRATES AND COVERS

(NOT TO SCALE)

COMMONWEALTH OF MASSACHUSETTS
KEVIN S. GRADY
CIVIL
No. 46264
REGISTERED PROFESSIONAL ENGINEER

REVISIONS	
APRIL 24, 2023	BOARD OF HEALTH PEER REVIEW
MAY 10, 2023	PLANNING BOARD PEER REVIEW

SITE PLAN

ASSESSORS MAP F9 LOT 11 & 12C

#0 &74 CONGRESS STREET

PEMBROKE, MASSACHUSETTS

PREPARED FOR:
WHATBARN, LLC
29 DUCK HILL ROAD
DUXBURY MA 02332

MARCH 13, 2023
SCALE: AS NOTED
JOB No. 22-286

GRADY CONSULTING, L.L.C.
Civil Engineers, Land Surveyors & Landscape Architects
71 Evergreen Street, Suite 1, Kingston, MA 02364
Phone (781) 585-2300

DETAILS - WATER & DRAIN

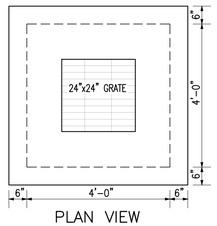

PLAN VIEW

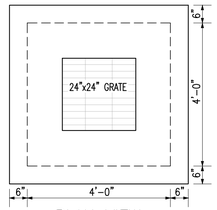

PLAN VIEW

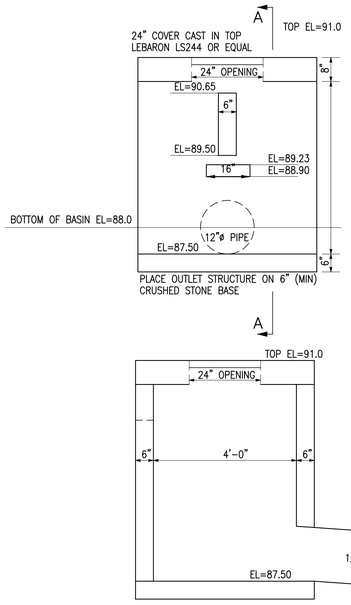

SECTION A–A

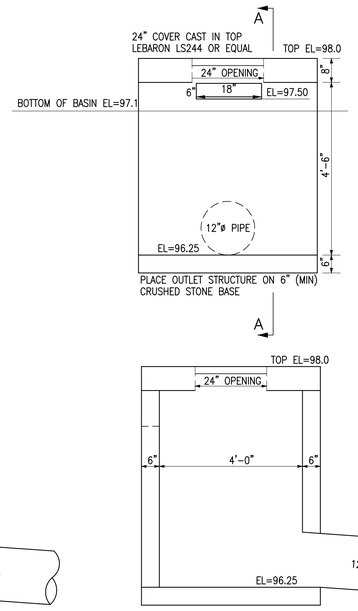

SECTION A–A

*OVERALL STRUCTURE HEIGHT MAY BE ADJUSTED BY THE MANUFACTURER

INFILTRATION BASIN #1
OUTLET CONTROL STRUCTURE
(NOT TO SCALE)

INFILTRATION BASIN #2
OUTLET CONTROL STRUCTURE
(NOT TO SCALE)

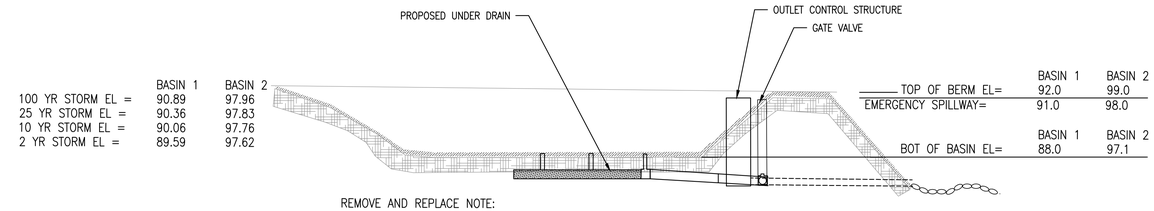

REMOVE AND REPLACE NOTE:
EXCAVATE ALL MATERIAL (FILL) TO MEDIUM LOAMY SAND LAYER. REPLACE PROPOSED INFILTRATION AREA WITH WITH CLEAN COARSE SAND. PLACE 6" BENTONITE LAYER AT THE PROPOSED FINISH GRADE IN NON–INFILTRATING AREAS (SEE PLAN SH 6). BENTOINITE AREAS TO BE FINE GRADED WITH 3–4" OF LOAM AND SEED. EXCAVATION TO BE INSPECTED BY GRADY CONSULTING PRIOR TO SOIL PLACEMENT.
CLEAN COURSE SAND VOLUME ESTIMATE = 88.0–84.5 X 2000 SF = 300± CY INFILTRATION BASIN #1
CLEAN COURSE VOLUME ESTIMATE = 97.0–91.7 X 700 SF = 165± CY INFILTRATION BASIN #2

INFILTRATION BASIN DETAIL
(NOT TO SCALE)

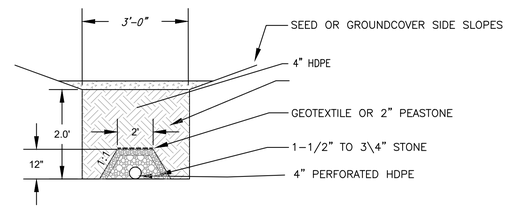

UNDER DRAIN CROSS SECTION DETAIL
(NOT TO SCALE)

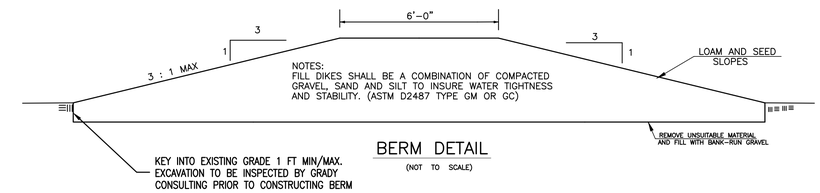

BERM DETAIL
(NOT TO SCALE)

0-74 Congress St *NRCC 24-hr C 100-Year Rainfall=8.68"*
Prepared by Grady Consulting LLC
HydroCAD® 10.20-2g s/n 09955 © 2022 HydroCAD Software Solutions LLC

Pond 1P: Subsurface #1 - Chamber Wizard Field A

Chamber Model = Cultec R-150XLHD (Cultec Recharger® 150XLHD)
Effective Size= 29.8"W x 18.0"H => 2.65 sf x 10.25'L = 27.2 cf
Overall Size= 33.0"W x 18.5"H x 11.00'L with 0.75' Overlap
Row Length Adjustment= +0.75' x 2.65 sf x 11 rows

33.0" Wide + 6.0" Spacing = 39.0" C-C Row Spacing

3 Chambers/Row x 10.25' Long +0.75' Row Adjustment = 31.50' Row Length +12.0" End Stone x 2 = 33.50' Base Length
11 Rows x 33.0" Wide + 6.0" Spacing x 10 + 12.0" Side Stone x 2 = 37.25' Base Width
6.0" Stone Base + 18.5" Chamber Height + 6.0" Stone Cover = 2.54' Field Height

33 Chambers x 27.2 cf +0.75' Row Adjustment x 2.65 sf x 11 Rows = 917.9 cf Chamber Storage

3,171.7 cf Field - 917.9 cf Chambers = 2,253.8 cf Stone x 40.0% Voids = 901.5 cf Stone Storage

Chamber Storage + Stone Storage = 1,819.4 cf = 0.042 af
Overall Storage Efficiency = 57.4%
Overall System Size = 33.50' x 37.25' x 2.54'

33 Chambers
117.5 cy Field
83.5 cy Stone

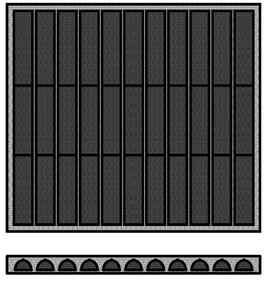

EXCAVATION NOTE:
VOLUME ESTIMATE = 33.5' WIDE X 37.5' LONG (RETAIN SANDY FILL) CONTRACTOR TO EXCAVATE TESTHOLE AT TIME OF CONSTRUCTION TO BE COORDINATED WITH GRADY CONSULTING SYSTEM #2

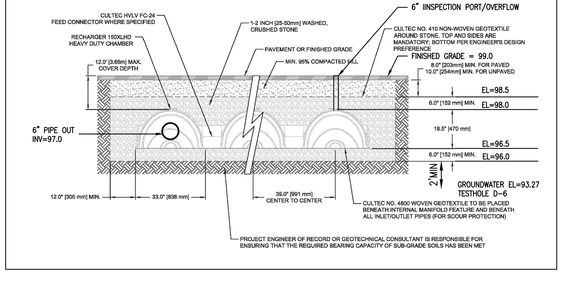

SUBSURFACE SYSTEM X–SECTION
(NOT TO SCALE)

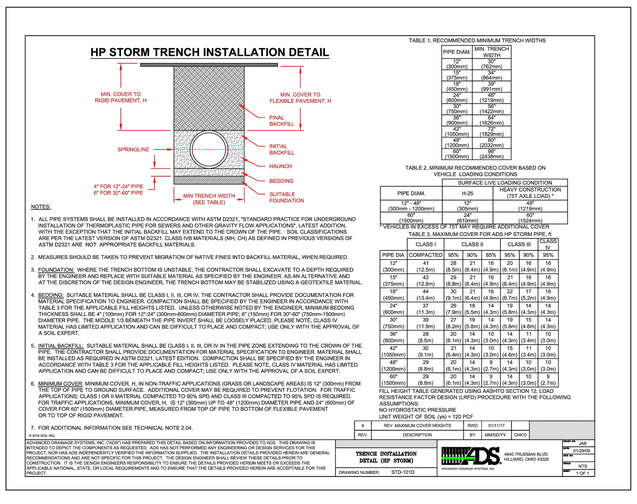

REVISIONS	
APRIL 24, 2023	BOARD OF HEALTH PEER REVIEW
MAY 10, 2023	PLANNING BOARD PEER REVIEW

SITE PLAN

ASSESSORS MAP F9 LOT 11 & 12C
#0 &74 CONGRESS STREET
PEMBROKE, MASSACHUSETTS

PREPARED FOR:
WHATBARN, LLC
29 DUCK HILL ROAD
DUXBURY MA 02332

MARCH 13, 2023
SCALE: AS NOTED
JOB No. 22–286

COMMONWEALTH OF MASSACHUSETTS
KEVIN S. GRADY
CIVIL
No. 46264
REGISTERED PROFESSIONAL ENGINEER

GRADY CONSULTING, L.L.C.
Civil Engineers, Land Surveyors & Landscape Architects
71 Evergreen Street, Suite 1, Kingston, MA 02364
Phone (781) 585–2300

DETAILS – DRAIN

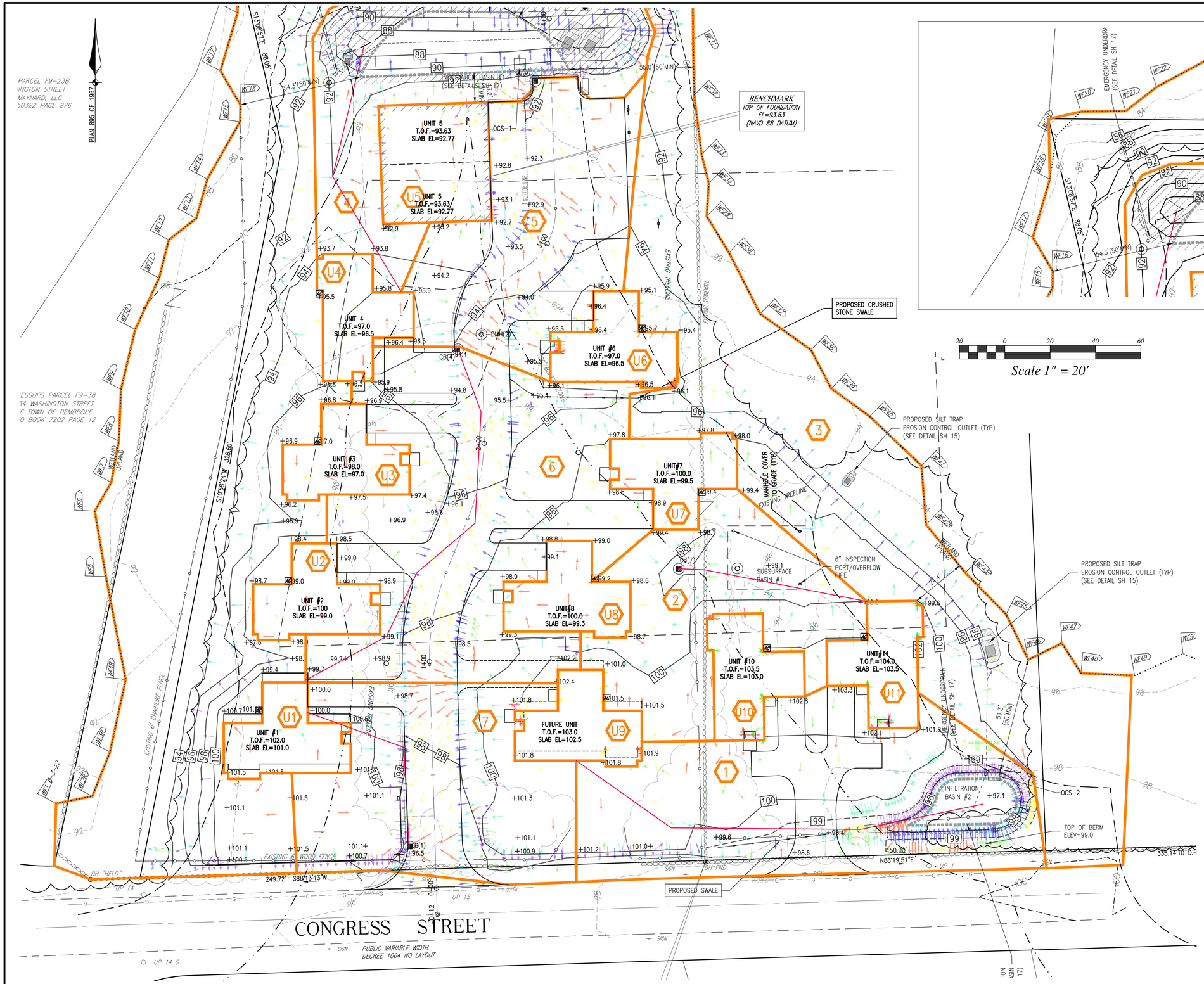

REVISIONS	
APRIL 24, 2023	BOARD OF HEALTH PEER REVIEW
MAY 10, 2023	PLANNING BOARD PEER REVIEW

KEVIN S. GRADY
CIVIL
No. 46264
REGISTERED PROFESSIONAL ENGINEER
COMMONWEALTH OF MASSACHUSETTS

SITE PLAN

ASSESSORS MAP F9 LOT 11 & 12C
#0 &74 CONGRESS STREET
PEMBROKE, MASSACHUSETTS

PREPARED FOR:
WHATBARN, LLC
29 DUCK HILL ROAD
DUXBURY MA 02332

MARCH 13, 2023
SCALE: AS NOTED
JOB No. 22-286

POST-DEVELOPMENT PLAN

GRADY CONSULTING, L.L.C.
Civil Engineers, Land Surveyors & Landscape Architects
71 Evergreen Street, Suite 1, Kingston, MA 02364
Phone (781) 585-2300

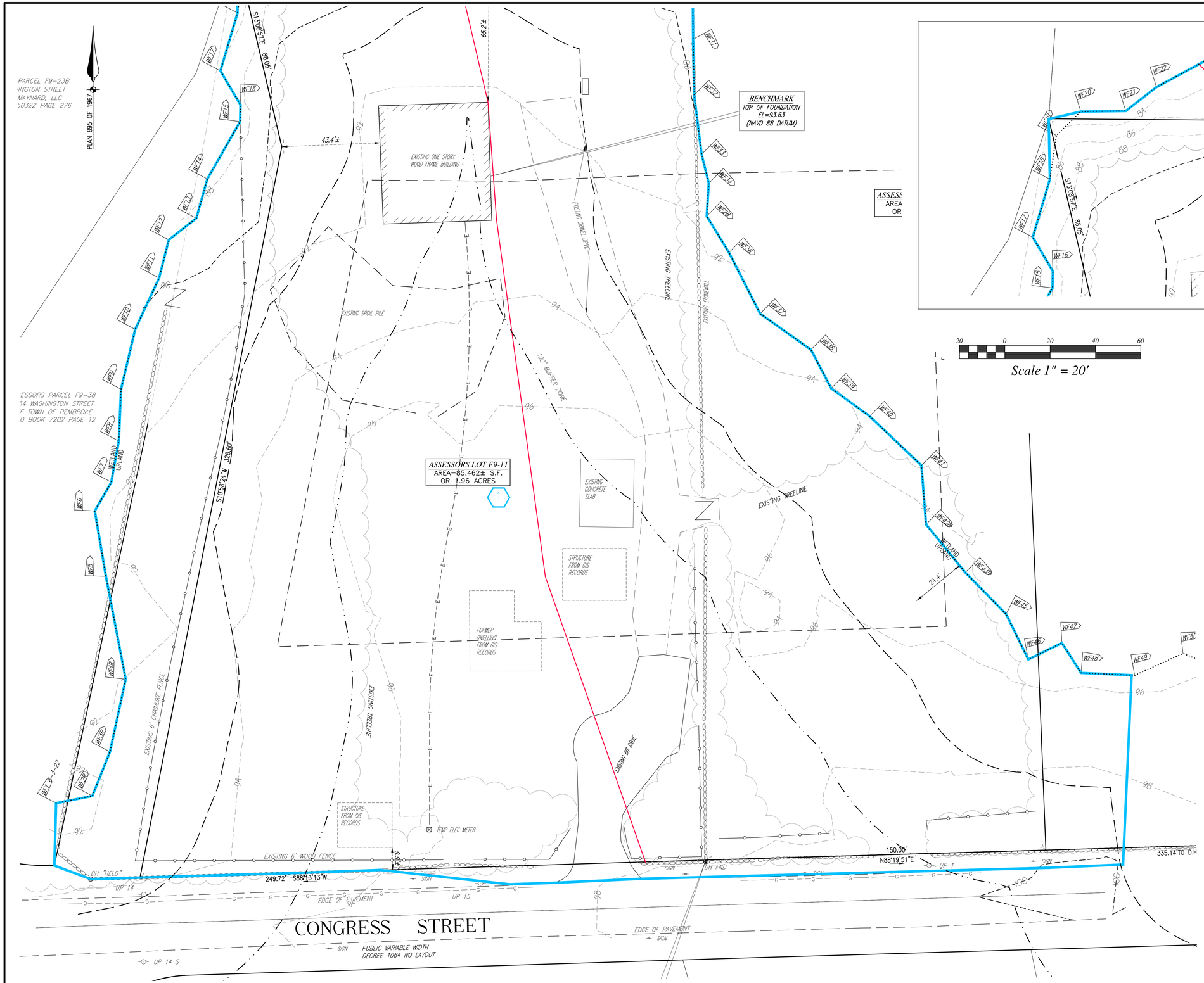

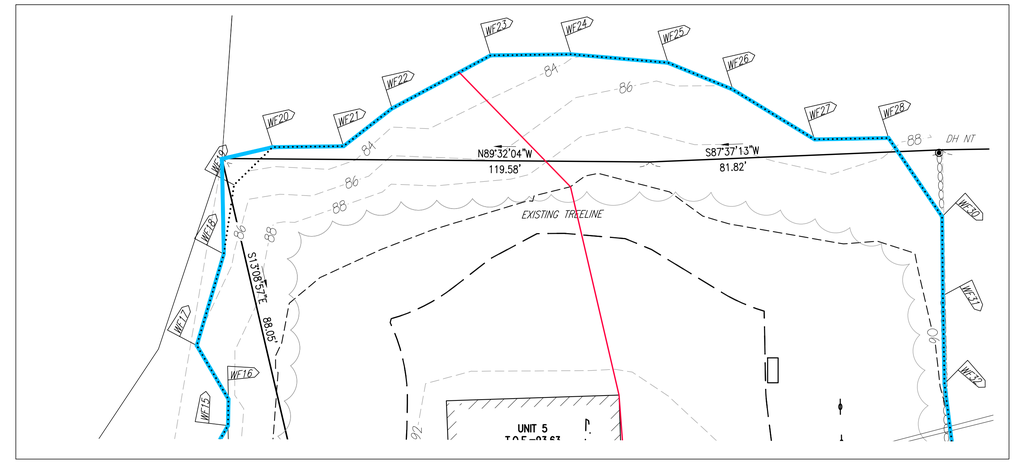

20 0 20 40 60

Scale 1" = 20'

REVISIONS	
APRIL 24, 2023	BOARD OF HEALTH PEER REVIEW
MAY 10, 2023	PLANNING BOARD PEER REVIEW

COMMONWEALTH OF MASSACHUSETTS
KEVIN S. GRADY
CIVIL
No. 46264
REGISTERED PROFESSIONAL ENGINEER

SITE PLAN

ASSESSORS MAP F9 LOT 11 & 12C
#0 &74 CONGRESS STREET
PEMBROKE, MASSACHUSETTS

PREPARED FOR:
WHATBARN, LLC
29 DUCK HILL ROAD
DUXBURY MA 02332

MARCH 13, 2023
SCALE: AS NOTED
JOB No. 22-286

PRE-DEVELOPMENT PLAN

GRADY CONSULTING, L.L.C.
Civil Engineers, Land Surveyors & Landscape Architects
71 Evergreen Street, Suite 1, Kingston, MA 02364
Phone (781) 585-2300